ARI-ZEDOX® - Fig. 122 - Double flanged high performance valve - Double offset

Fig. 122 -
ARI-ZEDOX® double flanged

ARI-ZEDOX®
with worm gear

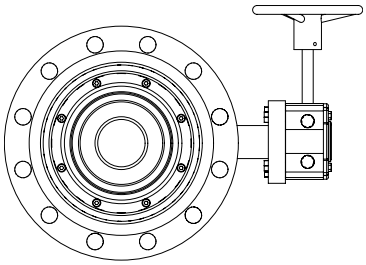

Page 4

ARI-ZEDOX®
with electric rotary actuator
Auma

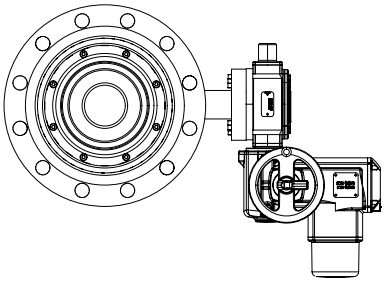

Page 5

ARI-ZEDOX®
with pneumatic actuator

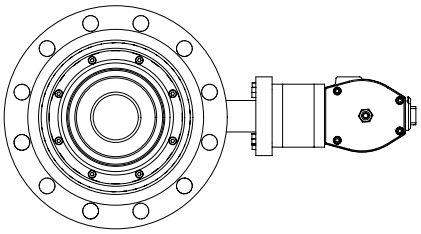

Page 6

ARI-ZEDOX®
with hydraulic actuator

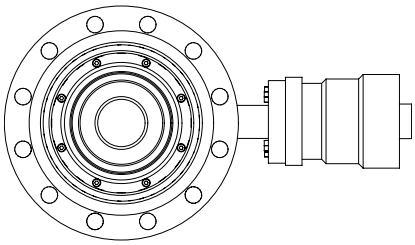

on request

Features:

- Carbon steel / stainless steel body
- Double offset construction:
  Rotary movement (90°) without wear or friction
- Metallic or PTFE+C sealing
- Bi-directional tightness
- Replaceable seat ring

A COMPANY OF THE ARI-GROUP

Double flanged high performance valve (High temperature steel, Stainless steel)

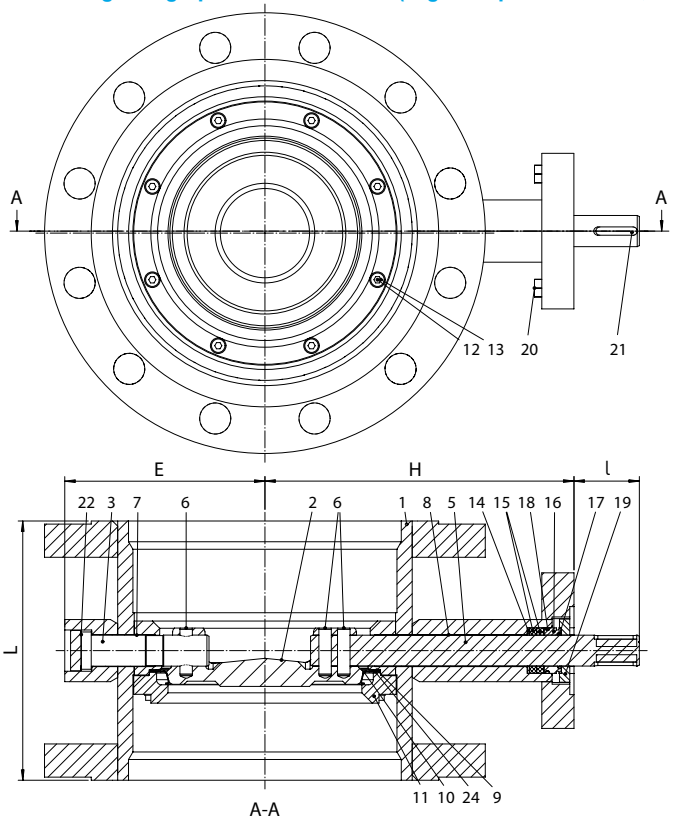

Figure	Nominal pressure	Material	Nominal diameter	Sealing element
84.122	PN10 - PN25	1.0425 / 1.0565	DN 200-700	PTFE+C (TS)
			DN 200-1200	Stainless steel (CS)
54.122	PN10 - PN25	1.4307	DN 200-700	PTFE+C (TS)
			DN 200-1200	Stainless steel (CS)

Face-to-face dimension series 14 acc. to EN 558-1

Flange acc. to ANSI 150 possible

Sealing element:	
• PTFE+C (TS) [1]	-40°C to 180°C
• Stainless steel (CS)	-40°C to 260°C
[1] Observe operating limits with sealing PTFE+C, refer to page 3	
Max. differential pressure:	
84.122	• 16 bar - standard
54.122	• 25 bar - option

Actuation arrangement:	
• Worm gear • Electric actuator	• Pneumatic actuator • Hydraulic actuator
Sealing leakage test:	
PTFE+C	• DIN EN 12266-1 Leakage rate A
Stainless steel	• DIN EN 12266-1 Leakage rate B

Options on request

Parts

Pos.	Sp.p.	Description	Fig. 84.122	Fig. 54.122
1		Body	P265GH, 1.0425 / 1.0565	X2CrNi18-9, 1.4307; special material by request
2		Disc	GX3CrNiMoN27-5-2, 1.4460	
3		Pivot	X4CrNiMo16–5-1, 1.4418	
5		Stem	X4CrNiMo16–5-1, 1.4418	
6		Pin	X2CrNiMoN22–5-3, 1.4462	
7		Bushing	PTFE on stainless steel net	
8		Bushing	PTFE on stainless steel net	
9 / 24	x	Shim [2]	978-C / SIGRAFLEX HOCHDRUCK (SIGRAFLEX HOCHDRUCK for steam version)	
10	x	Sitzring	CS: X2CrNiMo17-12-2, 1.4404 (optional: X1NiCrMoCu25-20-5, 1.4539) TS: PTFE+C; special material on request	
11		Retaining ring	P265GH, 1.0425	X2CrNi18-9, 1.4307; special material by request
12		Socket screw	A4-80	
13		Washer	ZN	
14		Back-up-ring	X2CrNiMo17-12-2, 1.4404	
15	x	Box packing	Graphite	
16		Shaft seal bushing	X2CrNiMo17-12-2, 1.4404	
17 / 18	x	O-ring	EPDM (not fitted in steam version)	
19		Gland	X2CrNiMo17-12-2, 1.4404	
20		Hexagonal screw	A4-70	
21		Key	C45, 1.0503	
22		Axial-washer	PTFE on stainless steel net	
	└ Spare parts			

[2] Only for CS-version
Information / restriction of technical rules need to be observed!
The engineer, designing a system or a plant, is responsible for the selection of the correct valve.
Resistance and suitability must be verified (contact manufacturer for information, refer to Product overview).

TS = PTFE+C (**T**eflon) seal and **S**tainless steel disc
CS = **C**hromed seatring and **S**tainless steel disc

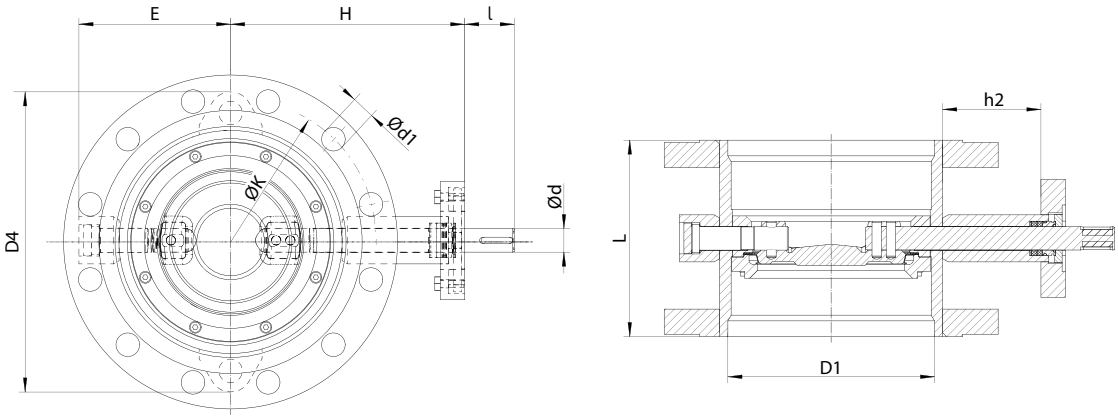

DN			200	250	300	350	400	450	500	600	700	800	900	1000	1200
Face-to-face dimension series 14 acc. to DIN EN 558-1															
L		(mm)	230	250	270	290	310	330	350	390	430	470	510	550	630
Dimensions															
D1		(mm)	210,1	263,0	312,7	344,4	393,8	444,4	495,4	593,6	693,6	795,2	894,4	994,0	1195
D4		(mm)	233	385	435	465	540	590	660	760	860	955	1070	1200	1440
Ød		(mm)	25	30	35	40	40	50	50	60	70	70	90	100	140
E		(mm)	154	193	229	255	299	326	351	376	439	495	575	636	805
H		(mm)	259	298	323	352	409	445	470	548	601	651	718	764	873
h2		(mm)	115	125	125	125	155	149	149	178	181	183	194	183	183
l		(mm)	58	63	69	75	75	86	86	103	119	119	125	130	160
Flange ISO 5211			F10	F12	F12	F14	F14	F16	F16	F16	F25	F30	F30	F30	F35
Standard-flange dimensions per side															
PN10	ØK	(mm)	295	350	400	460	515	565	620	725	840	950	1050	1160	1380
	n x Ød1	(mm)	8x22	12x22	12x22	16x22	16x26	20x26	20x26	20x30	24x30	24x33	28x33	28x36	32x39
PN16	ØK	(mm)	295	355	410	470	525	585	650	770	840	950	1050	1170	1390
	n x Ød1	(mm)	12x22	12x26	12x26	16x26	16x30	20x30	20x33	20x36	24x36	24x39	28x39	28x42	32x48
PN25	ØK	(mm)	310	370	430	490	550	600	660	770	875	990	1090	1210	1420
	n x Ød1	(mm)	12x26	12x30	16x30	16x33	16x36	20x36	20x36	20x39	24x42	24x48	28x48	28x56	32x56
Weights for double flanged high performance valve															
1.0425 / 1.0565	Fig. 84.122	(kg)	62	77	93	132	166	221	290	468	537	657	1084	1333	2338
1.4307	Fig. 54.122	(kg)													

Pressure-temperature-ratings			**Intermediate values for max. permissible operational pressure can be determined by linear interpolation of the given temperature / pressure chart.**							
acc. to Högfors standard	**PN**		**-40 °C**	**0 °C**	**50 °C**	**100°C**	**150°C**	**200°C**	**250°C**	**260°C**
1.0425 / 1.0565	16	(bar)	16	16	16	15	14,2	13,4	12,3	12,06
1.0425 / 1.0565	25	(bar)	25	25	25	23,4	22,2	21	19,2	18,84
acc. to Högfors standard	**PN**		**-40 °C**	**0 °C**	**50 °C**	**100°C**	**150°C**	**200°C**	**250°C**	**260°C**
1.4307	16	(bar)	16	16	16	14,8	13,2	11,7	10,8	10,62
1.4307	25	(bar)	25	25	25	23,1	20,7	18,2	16,8	16,52

Operating limits sealing element [1]	**Intermediate values for max. permissible operational pressure can be determined by linear interpolation of the given temperature / pressure chart.**									
Sealing PTFE+C (TS)	**-40 °C**	**0 °C**	**50 °C**	**100 °C**	**120 °C**	**150 °C**	**180 °C**	**200 °C**	**250 °C**	**260 °C**
	25	25	25	25	25	14,5	4	-	-	-

[1] Note additional restrictions of the pressure-temperature-ratings!

DN			200	250	300	350	400	450	500	600	700	800	900	1000	1200
Max. differential pressure															
Sealing PTFE+C (TS)	Disc Side	(bar)	25	25	25	25	16	16	16	16	16	-	-	-	-
	Shaft Side	(bar)	25	25	25	25	25	16	16	16	16	16	-	-	-
	Bi-directional	(bar)	-	-	-	-	-	-	-	-	-	-	-	-	-
Sealing stainless steel (CS)	Disc Side	(bar)	25	25	25	25	25	25	25	25	25	25	25	25	25
	Shaft Side	(bar)	25	25	25	25	25	25	25	25	25	25	25	25	25
	Bi-directional	(bar)	25	25	25	25	25	25	25	25	25	25	25	25	25

Operation torque for max. differential pressure 16 bar (bi-directional flow)																
PN25 [2]	Sealing PTFE+C	Torque [3]	(Nm)	190	320	550	850	1300	1800	2400	3400	5500	-	-	-	-
	Sealing stainless steel		(Nm)	240	400	700	1100	1600	2200	3000	4200	6800	10000	13000	16000	24000

[2] **max. differential pressure 16bar!**
[3] for steam duty use the next size up

ZEDOX® Double flanged high performance valve with worm gear

Opening and closing of the valves with the handwheel.

The position of the disc can be seen on a position indicator on top of the gear.

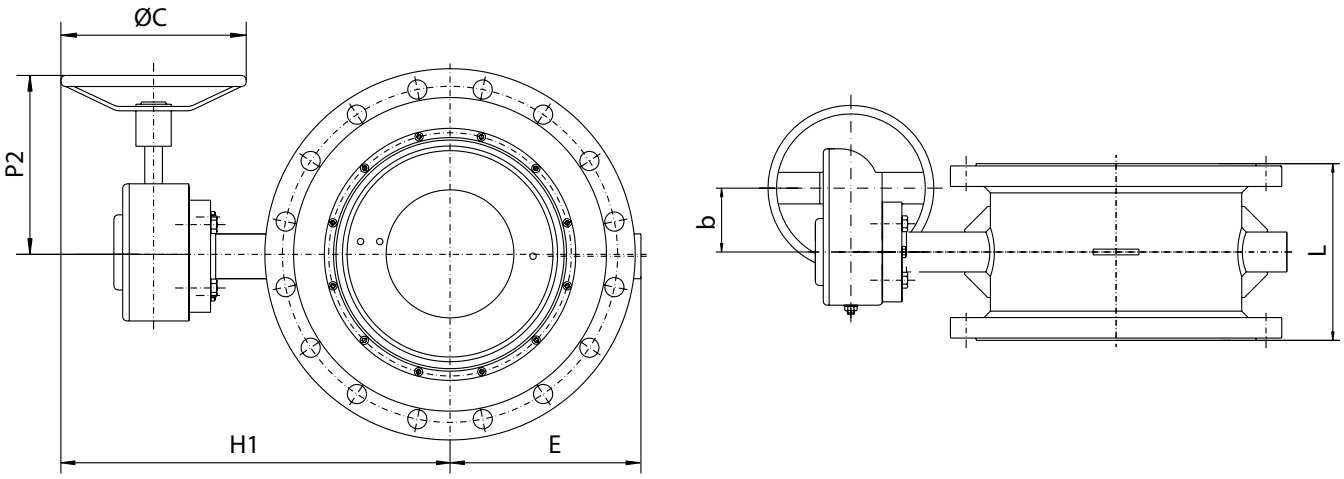

Parts			
Pos.	**Sp.p.**	**Description**	**Fig. 84./54.122**
500	x	Worm gear	
	└ Spare parts		

DN		**200**	**250**	**300**	**350**	**400**	**450**	**500**	**600**	**700**	**800**	**900**	**1000**	**1200**
Dimensions														
b	(mm)	71	71	71	86	86	130	130	53	263	263	278	384	384
ØC	(mm)	200	300	300	400	400	500	500	500	500	500	500	500	600
E	(mm)	154	193	229	255	299	326	351	376	439	495	575	636	805
H1	(mm)	400	489	513	594	651	750	775	858	910	960	1027	1114	1273
P2	(mm)	220	282	282	291	291	387	387	382	500	500	546	571	571
Type of gear		AB550N	AB550N	AB550N	AB880N	AB880N	AB2000N	AB2000N	AB2000N	AB6800N-PR4	AB6800N-PR4	AB6800N-PR6	AB6800N-PR6	A200N-PR10

Weights with manual gear Rotork [1)]														
1.0425 / 1.0565	Fig. 84.122	(kg)	71	86	102	146	180	245	314	492	600	720	1148	1397	2472
1.4307	Fig. 54.122	(kg)												

[1)] weight of hand wheel is not included

ZEDOX® Double flanged high performance valve with electric rotary actuator Auma

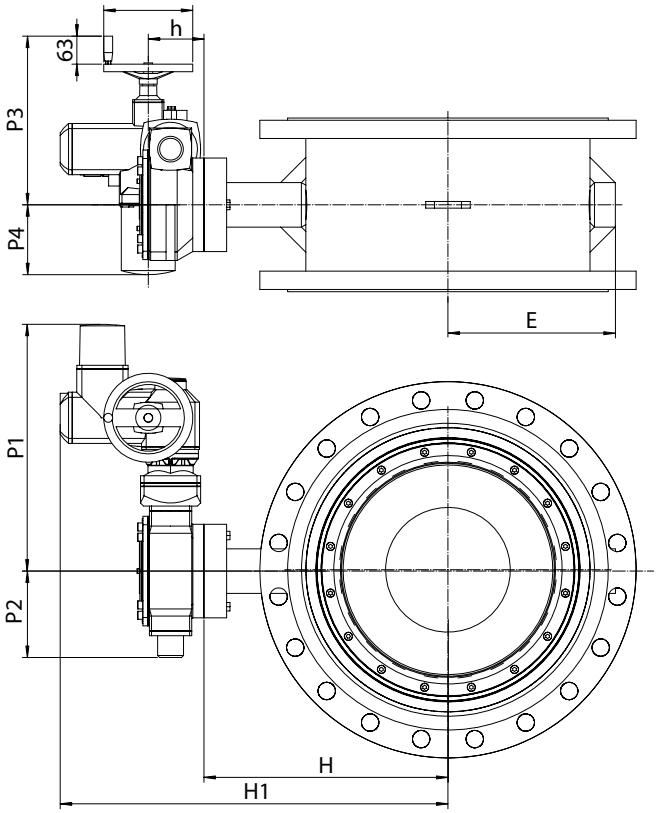

DN		200	250	300	350	400	450	500	600	700	800	900	1000	1200
Face-to-face dimension series 14 acc. to EN 558-1														
L	(mm)	230	250	270	290	310	330	350	390	430	470	510	550	630
Dimensions														
ØC	(mm)	160	160	160	200	200	160	160	200	200	160	160	160	160
E	(mm)	154	193	229	255	299	326	351	376	439	495	575	636	805
h	(mm)	80	85	85	107	107	115	115	125	125	130	130	130	155
H	(mm)	258	298	323	353	409	445	470	548	600	651	718	764	873
H1	(mm)	536	581	606	658	714	758	783	871	922	979	1046	1092	1226
P1	(mm)	393	422	422	428	428	547	547	554	554	698	698	758	758
P2	(mm)	98	127	127	133	133	189	189	194	194	290	290	367	367
P3	(mm)	302	315	315	334	334	352	352	379	379	412	412	452	452
P4	(mm)	214	201	201	202	202	164	164	157	157	175	175	208	208
Type of actuator PN25 max. differential pressure 16 bar, for CS- and TS-version		SA07.2-GS50.3 (51:1)-F10	SA07.6-GS63.3 (51:1)-F12	SA07.6-GS63.3 (51:1)-F12	SA10.2-GS80.3 (53:1)-F14	SA10.2-GS80.3 (53:1)-F14	SA07.6-GS100.3 (208:1)-F16	SA07.6-GS100.3 (208:1)-F16	SA10.2-GS125.3 (208:1)-F16	SA10.2-GS125.3 (208:1)-F25	SA07.6-GS160.3 (880:1)-F30	SA07.6-GS160.3 (880:1)-F30	SA07.6-GS200.3 (864:1)-F30	SA10.2-GS250.3 (848:1)-F35
Output drive	1/min	22	22	22	22	22	45	45	45	45	90	90	63	63
Operating time	s/90°	35	35	35	36	36	69	69	69	69	147	147	206	202

Weights with electric actuator															
1.0425 / 1.0565	Fig. 84.122	(kg)	88	108	128	186	220	275	358	536	649	848	1275	1524	2671
1.4307	Fig. 54.122	(kg)													

ZEDOX® Double flanged high performance valve with pneumatic rotary actuator AIR-TORQUE

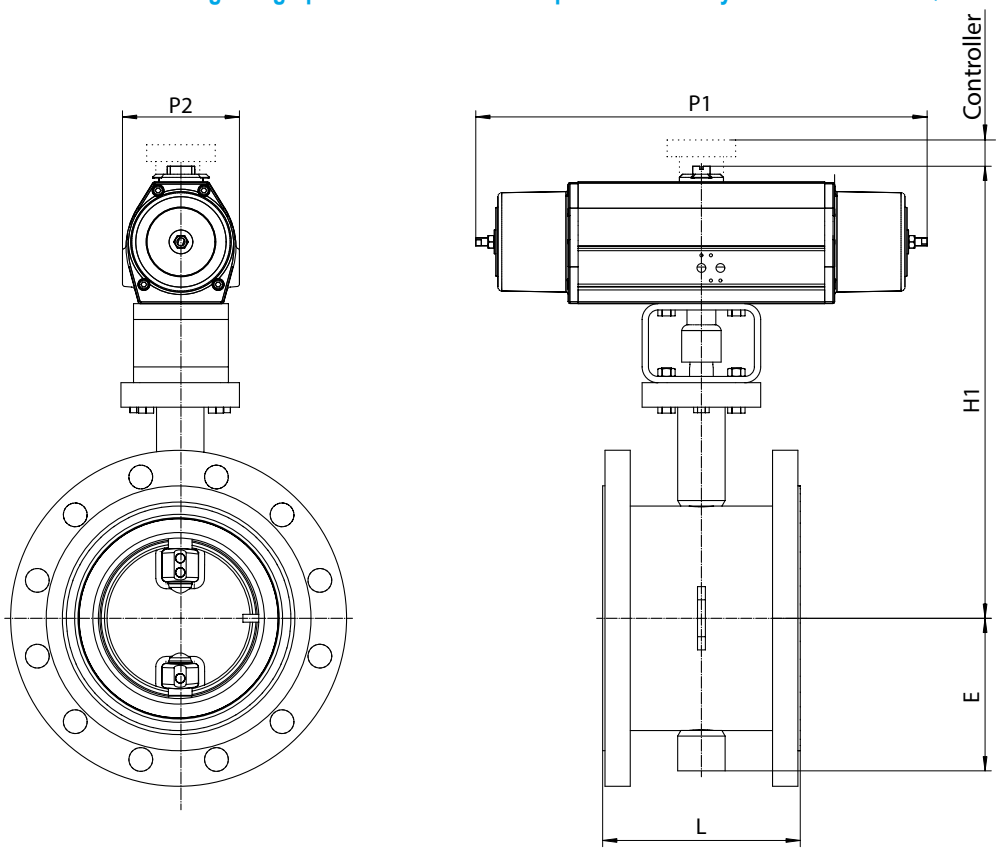

Type of actuator	P1 (mm)	P2 (mm)
SC00450	394,5	166
SC00600	422,5	181
SC00900	474	200
SC01200	528	221,5
SC02000	605	262
SC03000	710	330
SC04000	812	371
SC05000	855	418
SC10000	950	528

DN		200	250	300	350	400	450	500	600
Face-to-face dimension series 14 acc. to EN 558-1									
L	(mm)	230	250	270	290	310	330	350	390
Dimensions									
E	(mm)	154	193	229	255	299	326	351	376
H1 [1]	(mm)	630	693	772	885	969	1193	1218	1296
Type of actuator for max. differential pressure 16 bar [2]									
Spring closes flow from disc side actuating pressure actuator 5 bar	TS	SC00600-5/6	SC01200-5	SC02000-5	SC3000-5	SC4000-5/6	SC10000-4	SC10000-4/5	on request
	CS	SC00900-5	SC01200-5/6	SC02000-5/6	SC4000-5	SC05000-5/6	SC10000-4	SC10000-5/6	
Spring closes flow from disc side actuating pressure actuator 6 bar	TS	SC00600-5/6	SC01200-5	SC02000-5	SC3000-5	SC4000-5/6	SC05000-6	SC10000-4/5	
	CS	SC00900-5	SC01200-6	SC02000-6	SC4000-5	SC05000-5/6	SC10000-4	SC10000-5/6	
Spring closes flow from shaft side actuating pressure actuator 5 bar	TS	SC00600-4/5	SC00900-5/6	SC02000-4	SC03000-4	SC04000-4/5	SC05000-5	SC10000-4	SC10000-5/6
	CS	SC00600-5/6	SC001200-5	SC02000-5	SC03000-5/6	SC04000-5/6	SC10000-4	SC10000-4/5	on request
Spring closes flow from shaft side actuating pressure actuator 6 bar	TS	SC00450-6	SC00900-5/6	SC02000-4	SC02000-6	SC04000-4/5	SC05000-5	SC10000-4	SC10000-5/6
	CS	SC00600-5/6	SC001200-5	SC02000-5	SC03000-5/6	SC04000-5/6	SC05000-6	SC10000-4/5	on request

Weights with pneumatic actuator [1]										
1.0425 / 1.0565	Fig. 84.122	(kg)	99,6	125,5	168,9	288,9	346,6	476,7	545,7	723,7
1.4307	Fig. 54.122	(kg)								

For steam duty use the next actuator up

[1] with largest actuator option

[2] other differential pressures on request

Actuator bigger than DN600 on request

ZEDOX® Double flanged high performance valve with pneumatic actuator Rotork RC

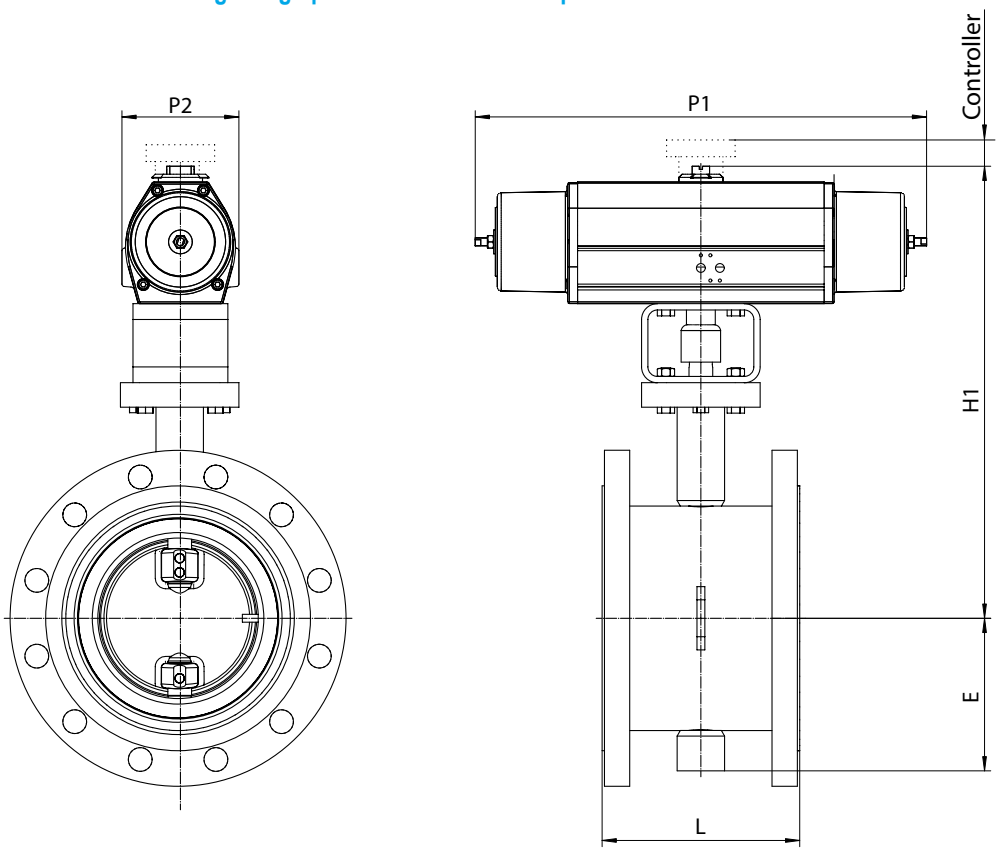

DN		200	250	300	350	400 [2]	450 [2]	500 [2]
Face-to-face dimension series 14 acc. to EN 558-1								
L	(mm)	230	250	270	290	310	330	350
Dimensions								
E	(mm)	154	193	229	255	299	326	351
H1	(mm)	504	686	701	730	1002	1038	1100
P1	(mm)	570	655	1020	1020	1020	1020	1700
P2	(mm)	144	220	220	220	220	220	380
Type of actuator spring closes [1]		RC260-SR	RC270-SR	RC280-SR	RC280-SR	RC-88-SR	RC-88-SR	RCG100-SR
Type of actuator double acting [1]		RC240-DA	RC250-DA	RC260-DA	RC265-DA	RC270-DA	RC280-DA	RC280-DA

Weights with pneumatic actuator									
1.0425 / 1.0565	Fig. 84.122	(kg)	83	130	169	208	310	365	805
1.4307	Fig. 54.122	(kg)							

[1] at air pressure 6 bar

[2] Δ P max = 16 bar

actuator bigger than DN500 on request

Actuator flange connection, with 2 parallel keys 180° rotated

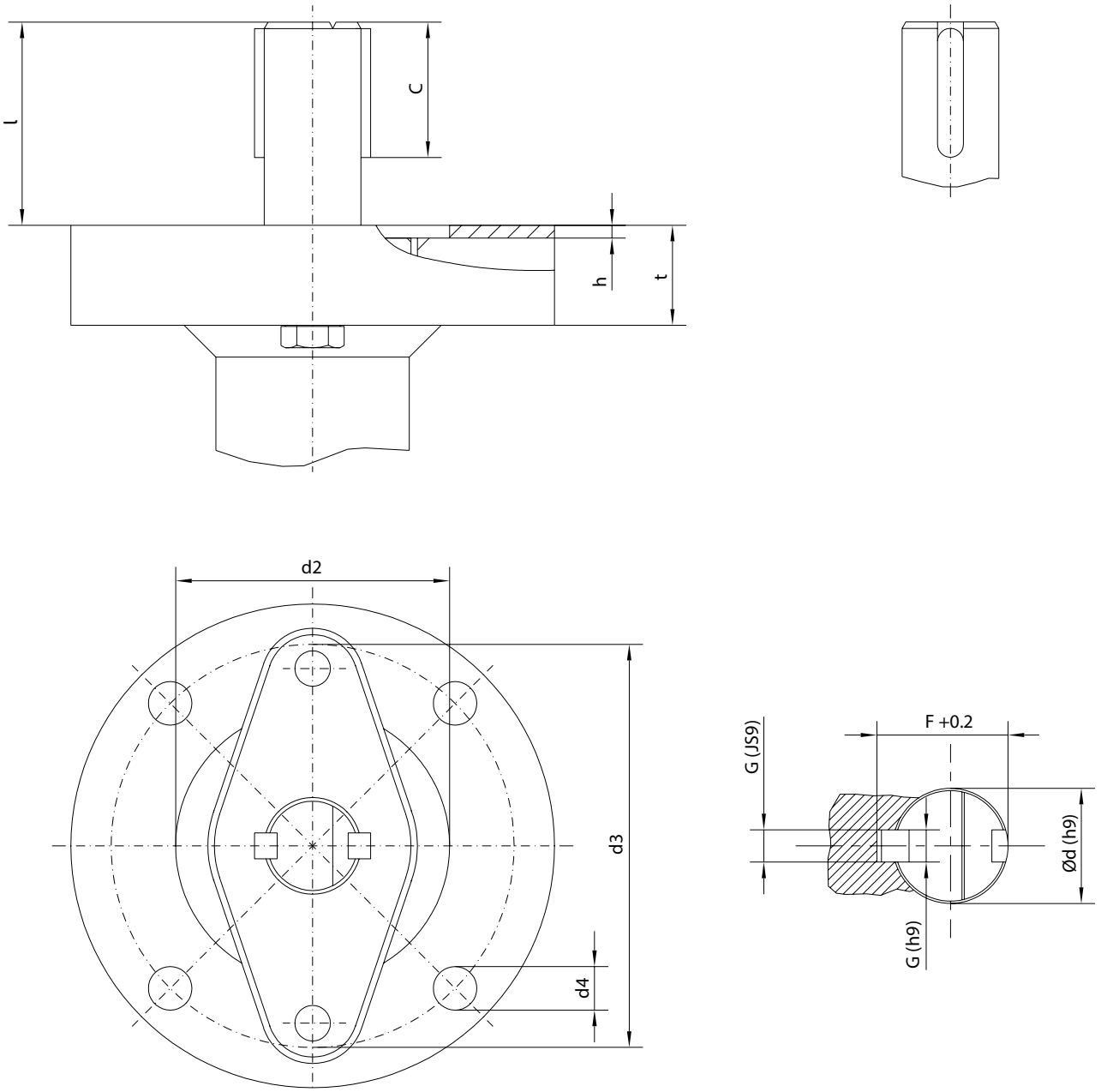

DN		200	250	300	350	400	450	500	600	700	800	900	1000	1200
Connection EN ISO 5211		F10	F12		F14		F16			F25	F30			F35
C	(mm)	38	42	47	52	52	65	65	82	92	92	113	125	102
Ød	(mm)	25	30	35	40	40	50	50	60	70	70	90	100	140
d2	(mm)	70	85		100		130			200	230			260
d3	(mm)	102	125		140		165			254	298			356
n x d4	(mm)	4x11	4x14	4x14	4x18	4x18	4x22	4x22	4x22	8x18	8x22	8x22	8x22	8x32
F	(mm)	28.3	33.3	38.3	43.3	43.3	53.3	53.3	64.4	74.9	74.9	95.4	105.4	148.4
G	(mm)	8	8	10	12	12	14	14	18	20	20	25	28	36
h	(mm)	4			5		6							
l	(mm)	58	63	69	75	75	86	86	103	119	119	125	130	160
t	(mm)	27	31	31	34	34	37	37	43	46	46	46	41	41

Kvs-value / Zeta-value														
DN		**200**	**250**	**300**	**350**	**400**	**450**	**500**	**600**	**700**	**800**	**900**	**1000**	**1200**
Kvs-Wert	(m^3/h)	725	1450	2700	4400	6350	9500	13750	15000	20000	25500	33500	39000	58000
Zeta-Wert	--	4,86	2,97	1,77	1,24	1,01	0,73	0,53	0,92	0,96	1,01	0,93	1,05	0,98

Difference between disc outside-diameter and face-to-face														
DN		**200**	**250**	**300**	**350**	**400**	**450**	**500**	**600**	**700**	**800**	**900**	**1000**	**1200**
B	**(mm)**	-	-	-	2	21	32	48	52	81	111	138	152	217
D	**(mm)**	-	-	-	38	161	213	273	299	404	504	595	655	854

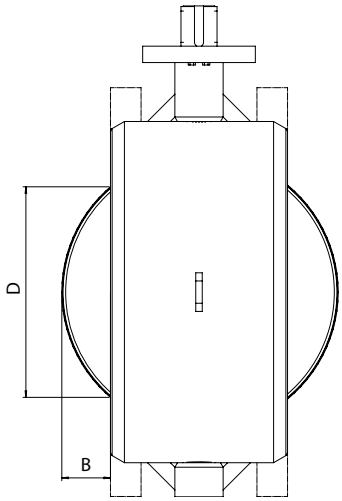

myValve® - Your Valve Sizing-Program.

myValve® is a powerful software tool that not only helps you size your system components; it also gives you instant access to all other data about the selected product, such as order information, spare parts drawings, operating instructions, data sheets, etc., whenever you need it.

Contents:

Module ARI-high performance valve ZEDOX-calculation

- Sizing of flow quantity Kv, volume flow Q, pressure drop p, sound level; Selecting the valve size with given capacity; Selection of the actuator.
  Calculation of torque for actuators in flow from shaft side and flow from disc side.

Media:

Integrated media-data bank (more than 160 media) with conditions:

- Vapours / gases
- Steam (saturated and superheated)
- Liquids

Special features:

- Project administration of the calculation and product data incl. spare part drawings concerning to project and tag number.
- Direct output or calculation and product data in PDF format.
- Product data could be taken for a direct order.
- SI- and ANSI-units with direct conversion to another data bank.
- Settings with over pressure or absolute pressure.
- All ARI valves are integrated in a data bank.
- Direct access concerning to the product on data sheets, operating instructions, pressure-temperature-diagram and spare part drawings
- Operation in company networks possible (no complex installations on individually PC's necessary).
- Extensive catalogue extending over several product groups.

System Requirements:

Windows operating systems, Linux, etc.