LINE 042 1/4" | MODULAR UNITS

GENERAL FEATURES

Modular units Line 042 have been designed for delivering the utmost assembling flexibility in order to realize battery sets featuring exactly the functions that customer's application requires.
The additional available modules are the following:
V3 manual shut-off valve with lock
SV electric or penumatic shut-off valve
AVP slow-start valve
MF coalescing microfilter 0,01 micron
CF activated carbon filter
PA additional air inlet , intermediate, inlet or outlet

GENERAL TECHNICAL DATA

Fluid	compressed air
Working temperature (a 10 bar):	-5 / +50°C (at temperature lower than 2°C air must be dried)
Connections IN-OUT	G1/4"
Assembling type	Unit kit or battery kit
Mounting position	see singol components
Wall fixing	through holes on the body or brackets
Version with lock	V3 standard; R and FR upon request
Preset tamper-proof version	R and FR upon request

UNITS ASSEMBLING KIT

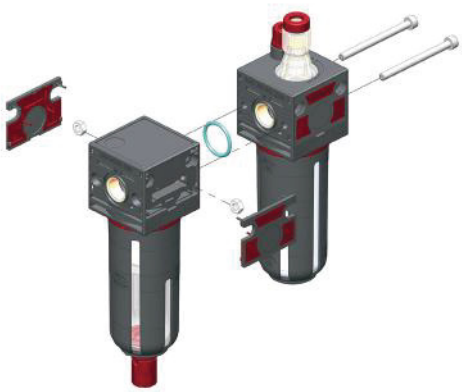

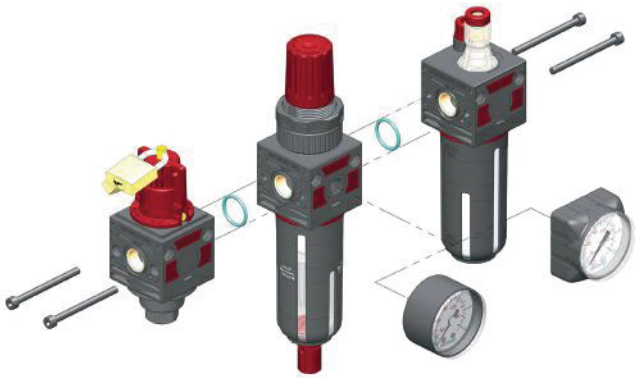

Art. C400600001 assembling kit for units FRL 042: for assembling sets of 2 or 3 units: FR+L; F+R+L; V3+FR+L or F+L; F+MF

LINE 042 1/4" | MODULAR UNITS

BATTERY ASSEMBLING KIT (SLIM KIT)

Art. C420600007 Slim Kit: assembling kit for battery sets FRL 042: it can be used for all combinations

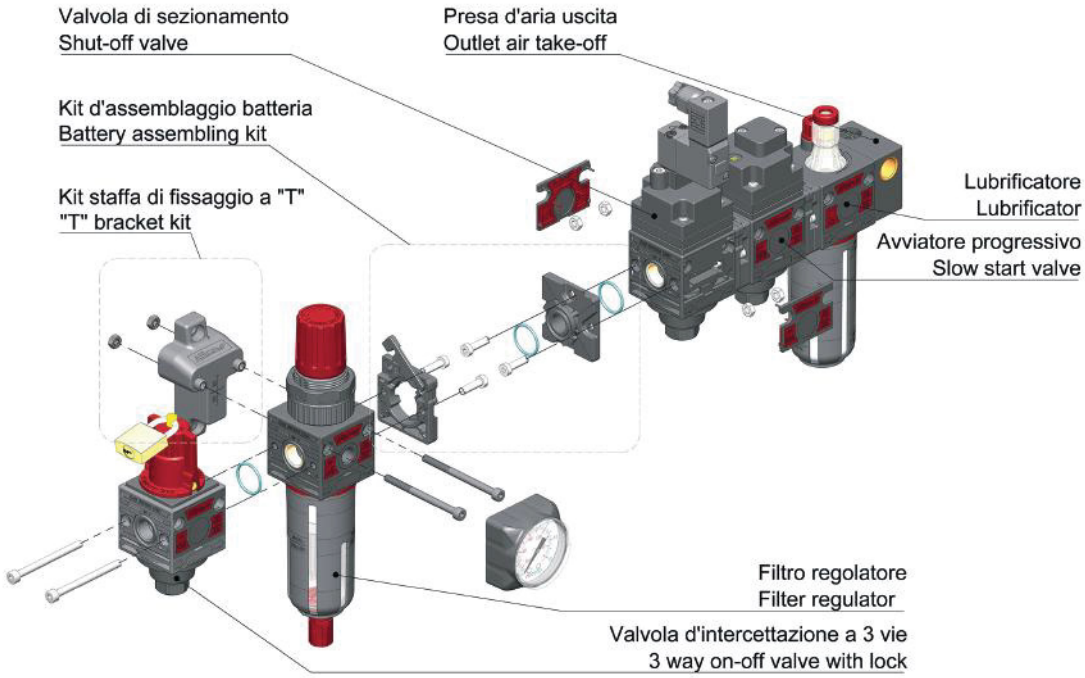

This Kit, that has been designed for providing the greatest flexibility in configurating battery sets Line 042, even offers the possibility to turn 90° the components with respect to the main axis.

STANDARD ORIENTATION

90° ORIENTATION

HOW TO ASSEMBLE

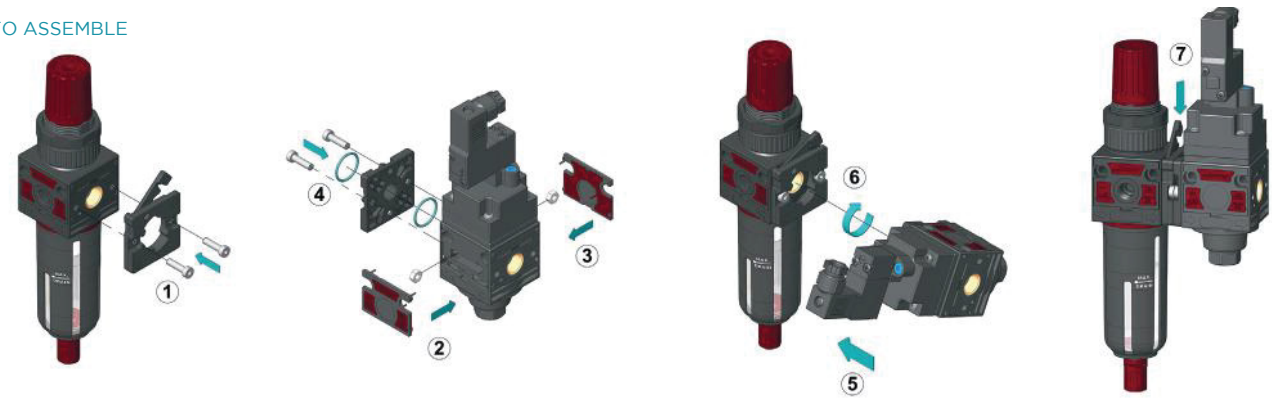

ASSEMBLY PHASES:

1. Assemble the kit left side (you can always find fixing nuts on the body of regulator and filter regulator)

2-3, Remove temporarily the plates, replace the holding bit with the nuts.

4. Assemble the kit right side

5. Turn one of the two units for allowing the locking.

6. Reposition the unit to its correct position.

7. Lock the safety tooth.

LINE 042 1/4" | MODULAR UNITS

CONDENSATE DRAIN

The condensate building up within the pneumatic systems is oftern causing malfunctioning and expensive extraordinary maintenance. Therefore, it is of utmost importance providing a good separation operated by the filter and an effective drainage to the ouside, in order to avoid an excessive piling up. Aircomp offers the opportunity to equip the filters with different types of condensate drain according to the system requirements.

SEMIAUTOMATIC DRAIN (SS)

Semiautomatic drain is supplied as standard on all Aircomp Lines.
The standard drain closes when the bowl is pressurized (min. P 0,5 bar) and opens discharging the condensate whenever the unit is depressurized.
The drain can be manually set to always "closed" modality (closed both when the bowl is pressurized and depressurized).

FLOAT TYPE AUTOMATIC DRAIN (SA)

Float type automatic drain opens even when the bowl is pressurized upon reaching a set condensate level. The excess condensate is discharged to the outside and can be conveyed connecting a drainage hose to the duct.

DIFFERENTIAL AUTOMATIC DRAIN (SAD)

Differential automatic drain opens even when the bowl is pressurized but only when there is air consumption (min. delta P = 0,2 bar) and upon reaching a set condensate level. The excess condensate is discharged to the outside. It is possible to connect a drainage hose to the duct.

OPEN 1/8 CONNECTION (S18)

The seat with female thread 1/8 , available upon request, allows the connection to alternative remote open/close systems, such as exhaust solenoid valves.
It is available also with locking pin with "manual drain" function.

UNITS WITH COMPACT GAUGE

Units can be requested complete with gauge.

In this case, they are equipped with our compact gauge offering following advantages:
Visibility: The wide dispaly ensures a better visibility.
Compactness: Designed for having reduced dimensions, the Compact Gauge restrains the risk of breaking.
Easiness: Simple mounting without tools.Tightness is guaranteed by an O-RIng, no teflon or sealant are required.
Versatility: The new Compact Gauge can be re-used on other Aircomp units. In case of need, it can be replaced with other commercial gauges.

LINE 042 1/4" | MODULAR REGULATORS

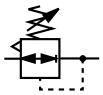

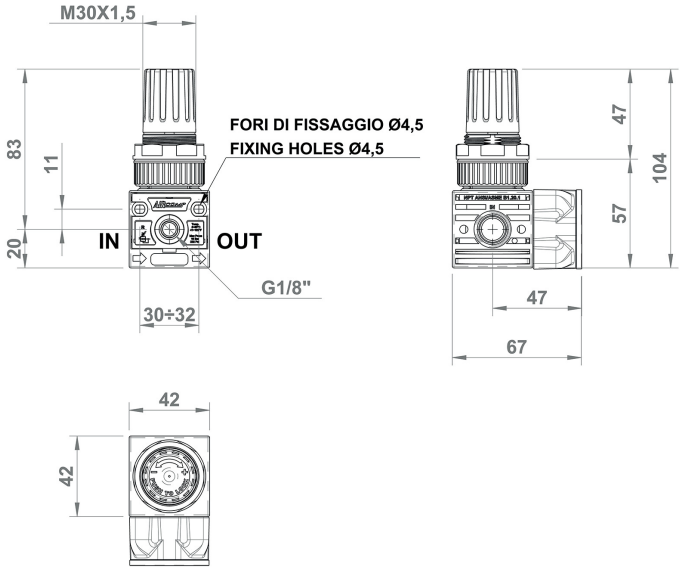

GENERAL FEATURES

Modular regulator with balance valve which ensures big flow rate and low load loss.
Relieving for a quick exhaust of the upstream overpressure.
Knob with pressure locking device.
Equipped with nut and nr. plug.

GENERAL TECHNICAL DATA

Pressure range	0-4; 0-8; 0-12 Bar
Maximum inlet pressure	16 Bar
Reference flow rate (P1= 6,3 bar ΔP= 1 bar)	1.200 Nl/min
Working temperature (a 10 bar)	-5 / +50°C*
Max Torque G1/4" IN-OUT	25 Nm
Max tourque gauge port	**round:** 1 Nm **compact:** manual
Weight	0,125 kg

Below 3°C the air of the circuit must be free from humidity

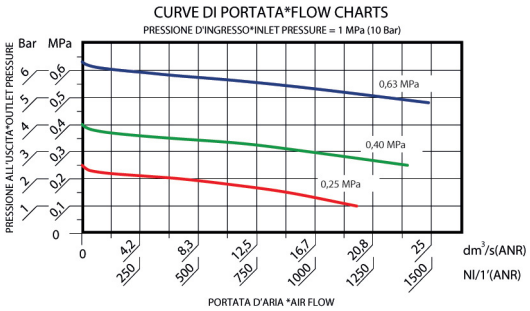

For the non-relieving models please go to Water preparation section.

ORDERING CODE

CODE	REF.
042.01.00004	R 1/4" 042 04 R
042.01.*****	R 1/4" 042 08 R
042.01.00006	R 1/4" 042 12 R

GUIDE TO REFERENCES

R 1/4" 042 08 R LK

Product
- **R** = Regulator

Connection
- **1/4"** = G 1/4"
- **3/8"** = G 3/8"
- **1/2"** = G 1/2"
- **3/4"** = G 3/4"
- **1"** = G 1"

Line
- **042**
- **050**
- **052**
- **075**
- **080**
- **095**

Range of pressure
- **04** = 0 - 4 Bar
- **08** = 0 - 8 Bar
- **12** = 0 - 12 Bar

Version
- **R** = Relieving

Version
- = Standard
- **B** = For battery

Special type
- **LK** = Lockable

WOULD YOU LIKE TO ORDER THE REGULATOR COMPLETE WITH GAUGE?

Replace 0 with "M" the the 6th digit of the part nr. for example:

042.01.M0004 R 1/4" 042 04R + GAUGE

LINE 042 1/4" | REGULATORS FOR BATTERY

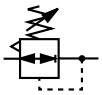

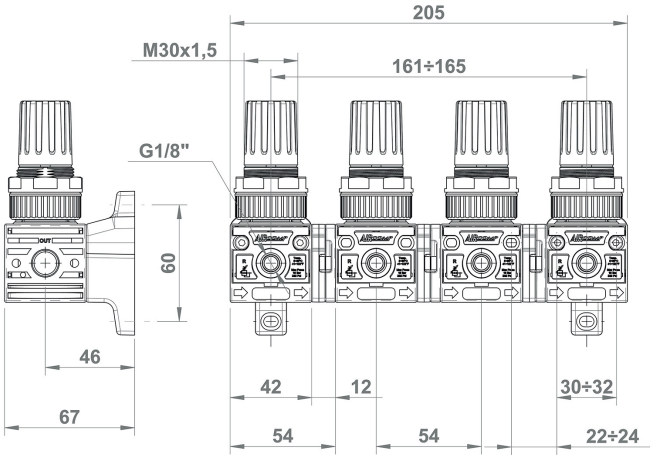

GENERAL FEATURES

Modular regulator for BATTERY assembling, with common inlet and regulated pressure on the front connections.
Constant supply for all regulators and independent regulation pressure for each port.
Relieving for a quick exhaust of downstream overpressure.
Knob with locking pressure device.
Equipped with nut and nr. 1 plug.

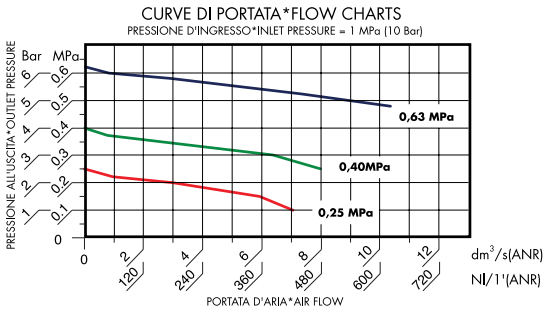

GENERAL TECHNICAL DATA

Pressure range	0-2; 0-4; 0-8; 0-12 Bar
Maximum inlet pressure	16 Bar
Reference flow rate (P1= 6,3 bar ΔP= 1 bar)	600 Nl/min
Working temperature (a 10 bar)	-5 / +50°C*
INLET-OUTLET connections	G1/4"
Regulated pressure connections	G1/8"
Max Torque G1/4" IN-OUT	25 Nm
Max tourque gauge port round	1 Nm
Weight	0,125 kg

Below 3°C the air of the circuit must be free from humidity

GUIDE TO REFERENCES

R 1/4" 042 08 R LK

Product
- **R** = Regulator

Connection
- **1/4"** = G 1/4"
- **3/8"** = G 3/8"
- **1/2"** = G 1/2"
- **3/4"** = G 3/4"
- **1"** = G 1"

Line
- **042**
- **050**
- **052**
- **075**
- **080**
- **095**

Range of pressure
- **04** = 0 - 4 Bar
- **08** = 0 - 8 Bar
- **12** = 0 - 12 Bar

Version
- **R** = Relieving

Version
- = Standard
- **B** = For battery

Special type
- **LK** = Lockable

ORDERING CODE

CODE	REF.
042.01.00045	R 1/4" 042 02 R B
042.01.00046	R 1/4" 042 04 R B
042.01.00047	R 1/4" 042 08 R B
042.01.00048	R 1/4" 042 12 R B

For the non-relieving models please go to Water preparation section.

Please note: the regulator for battery is not suitable for the COMPACT gauge. The round gauge must be used.

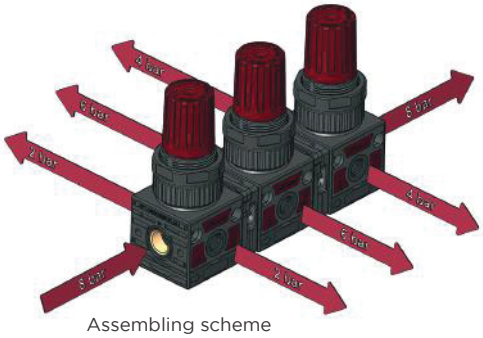

Assembling scheme

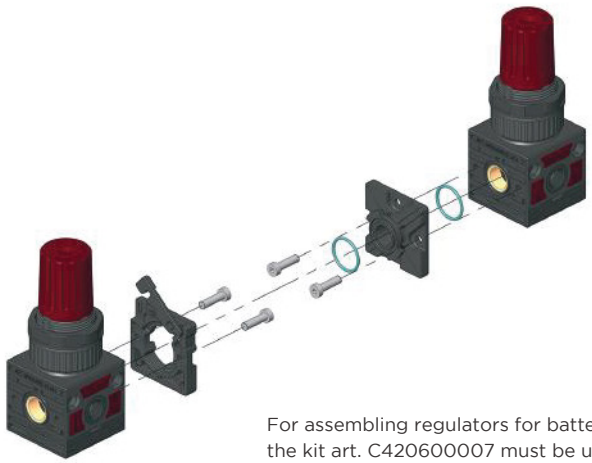

For assembling regulators for battery, the kit art. C420600007 must be used.

LINE 042 1/4" | MODULAR FILTERS

Ⓐ FORI DI FISSAGGIO Ø4.5
FIXING HOLES Ø4.5

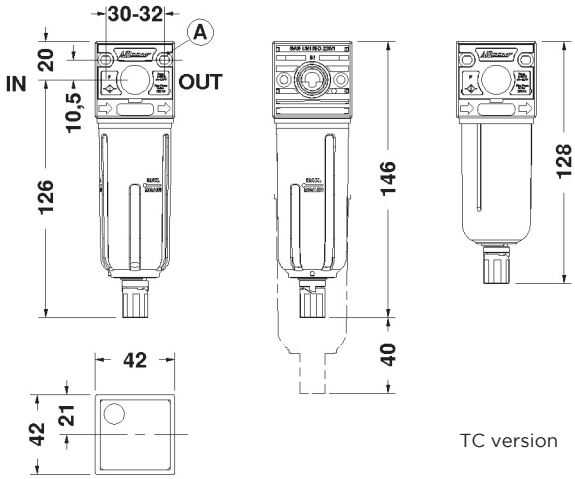

PE and TT version.

TC version

GENERAL FEATURES

Modular filter delivering high degree of condensate separation and low load loss.
It can be wall mounted through the holes prearranged on the body.
Equipped with semiautomatic condensate drain as standard (SS).
Available options: float type automatic drain (SA) and differential (SAD), which can convey condensate to the outside even when the bowl is pressurized.
Bowl made from hardened polyamide, available in following configurations:
TT = transparent; PE = outer guard; TC = short transparent.

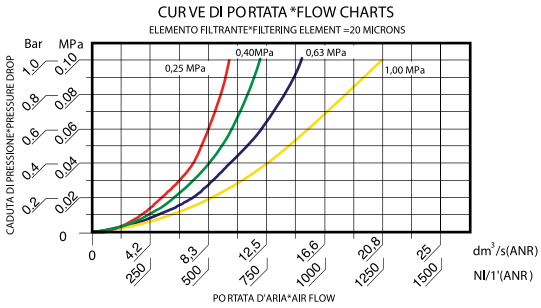

GENERAL TECHNICAL DATA

Maximum inlet pressure	16 Bar
Drain working pressure	mod. SS: 0,5 – 16 Bar mod. SA: 1,5 – 10 Bar mod. SAD: 2 – 12 Bar
Filtering degree	5 micron; 20 micron
Reference flow rate (P1= 10 bar ΔP= 1 bar)	1.250 Nl/min
Working temperature (a 10 bar)	-5 / +50°C*
Bowl capacity	TT = 22cc; PE = 22cc; TC = 15cc
Max Torque G1/4" IN-OUT	25 Nm
Weight	0,095 kg

Below 3°C the air of the circuit must be free from humidity

ORDERING CODE

CODE	REF.
042.02.*****	F 1/4" 042 20 TT SS
042.02.00109	F 1/4" 042 5 TT SS
042.02.00072	F 1/4" 042 20 PE SS
042.02.00118	F 1/4" 042 5 PE SS
042.02.00110	F 1/4" 042 20 TC SS (short bowl)
042.02.00176	F 1/4" 042 5 TC SS (short bowl)
Float type automatic drain version.	
042.02.00151	F 1/4" 042 20 TT SA
042.02.00152	F 1/4" 042 5 TT SA
042.02.00153	F 1/4" 042 20 PE SA
042.02.00154	F 1/4" 042 5 PE SA
"Differential" automatic drain version.	
042.02.00180	F 1/4" 042 20 TT SAD
042.02.00181	F 1/4" 042 5 TT SAD
042.02.00182	F 1/4" 042 20 PE SAD
042.02.00183	F 1/4" 042 5 PE SAD

GUIDE TO REFERENCES

F 1/4" 042 20 PE SS

Product
- **F** = Filter
- **MF** = Microfilter
- **CF** = Activated carbon

Connection
- **1/4"** = G 1/4"
- **3/8"** = G 3/8"
- **1/2"** = G 1/2"
- **3/4"** = G 3/4"
- **1"** = G 1"

Line
- **042**
- **050**
- **052**
- **075**
- **080**
- **095**

Filtering element
- **5** = 5 micron
- **20** = 20 micron
- **0,01** = 0,01 micron
- **CA** = Activated carbon

Tazza
- **TT** = Transparent (Line 042 only)
- **TC** = Short transparent (Line 042 only)
- **PE** = With outer guard

Condensate Drain
- **SS** = Semiautomatic (standard)
- **SA** = Automatic float type
- **SAD** = Automatic differential
- **S18** = Open seat 1/8 F

LINE 042 1/4" | COALESCING MICROFILTERS (OIL REMOVER)

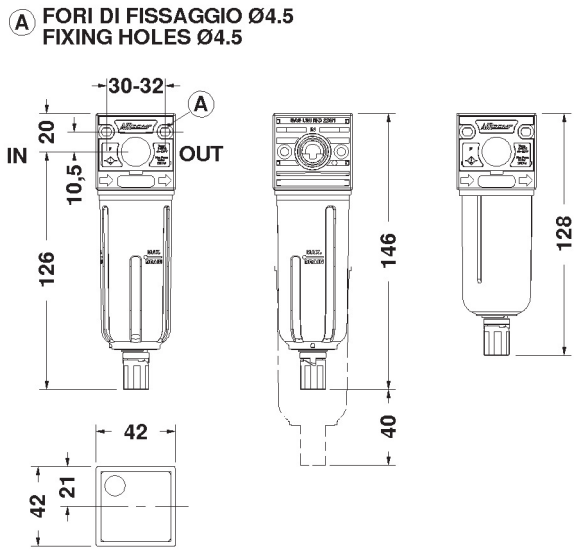

PE and TT version. TC version

GENERAL FEATURES

Modular filter with coalescing cartridge made from glass boro-silicate fiber providing high filtering efficiency (99,97% on 0,01 micron particles).
It is recommended to install a 5 micron filter upstream in order to allow a longer life of the coalescing cartridge.
Application: it is suitable for removing oil remnants in pneumatic circuits.
It can be wall mounted through the holes prearranged on the body.
Equipped with semiautomatic condensate drain as standard (SS).
Bowl made from hardened polyamide, available in following configurations: TT = transparent; PE = outer guard; TC = short transparent.

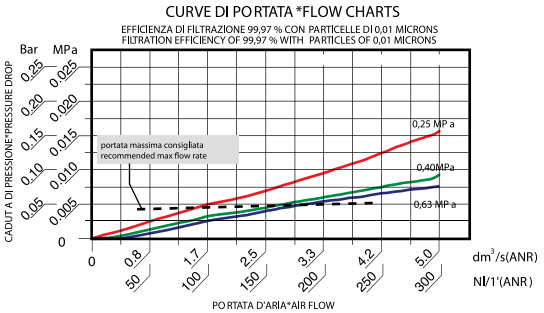

GENERAL TECHNICAL DATA

Maximum inlet pressure	16 Bar
Drain working pressure	0,5 Bar
Filtering degree	0,01 micron
Recommended max flow rate	180 Nl/min
Working temperature (a 10 bar)	-5 / +50°C
Bowl capacity	TT = 22cc; PE = 22cc; TC = 15cc
Max Torque G1/4" IN-OUT	25 Nm
Weight	0,095 kg

ORDERING CODE

CODE	REF.
042.02.00064	MF 1/4" 042 0,01 TT SS
042.02.00115	MF 1/4" 042 0,01 PE SS
042.02.00111	MF 1/4" 042 0,01 TC SS (short bowl)
Float type automatic drain version.	
042.02.00159	MF 1/4" 042 0,01 TT SA
042.02.00160	MF 1/4" 042 0,01 PE SA
"Differential" automatic drain version.	
042.02.00184	MF 1/4" 042 0,01 TT SAD
042.02.00185	MF 1/4" 042 0,01 PE SAD

GUIDE TO REFERENCES

F 1/4" 042 20 PE SS

Product
- **F** = Filter
- **MF** = Microfilter
- **CF** = Activated carbon

Connection
- **1/4"** = G 1/4"
- **3/8"** = G 3/8"
- **1/2"** = G 1/2"
- **3/4"** = G 3/4"
- **1"** = G 1"

Line
- **042**
- **050**
- **052**
- **075**
- **080**
- **095**

Filtering element
- **5** = 5 micron
- **20** = 20 micron
- **0,01** = 0,01 micron
- **CA** = Activated carbon

Bowl
- **TT** = Transparent (Line 042 only)
- **TC** = Short transparent (Line 042 only)
- **PE** = With outer guard

Condensate Drain
- **SS** = Semiautomatic (standard)
- **SA** = Automatic float type
- **SAD** = Automatic differential
- **S18** = Open seat 1/8 F

COALESCENT CARTRIDGE

FUNCTIONING

The air with impurity enter into the special high efficiency cartridge, which stops solid particles, captures and joins outside the oil particles (coalescing effect), so that they can easily fall to the bottom of the bowl and be drained outside. In doing so, the filtered air will be free from solid impurities and liquid particles.

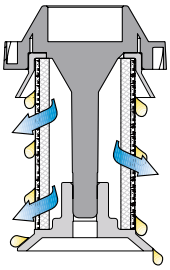

LINE 042 1/4" | CARBON FILTERS

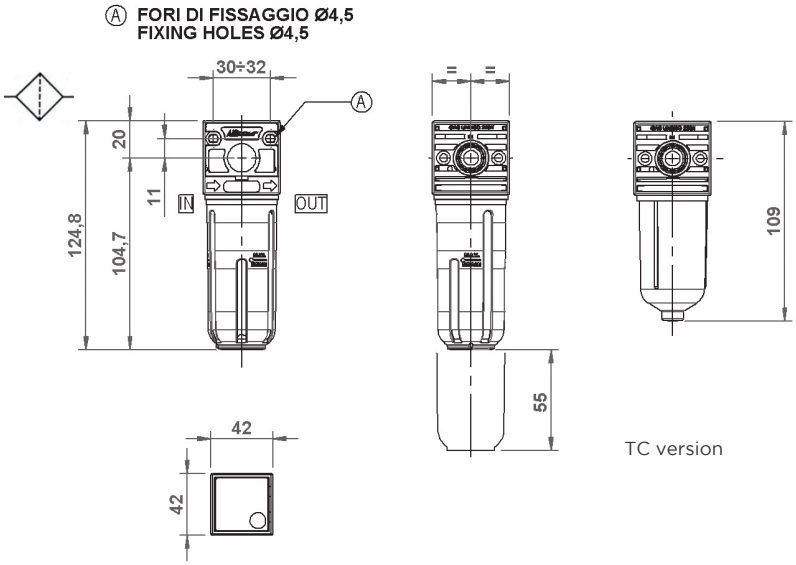

PE and TT version.

GENERAL FEATURES

Aircomp activated carbon filter exploits the absorbtion properties of activated carbon in order to increase air purity and eliminate unpleasant smell in the air aimed at the industrial sector.
The activated carbon filter, in order to guarantee its performance, needs to be associated with a coalescing filter, that should be preceded by a 5 Micron filter (F+MF+CF).
It can be wall mounted through the holes prearranged on the body.
Closed bowl (without drain) made from hardened polyamide, available in following configurations: TT = transparent; PE = outer guard; TC = short transparent.

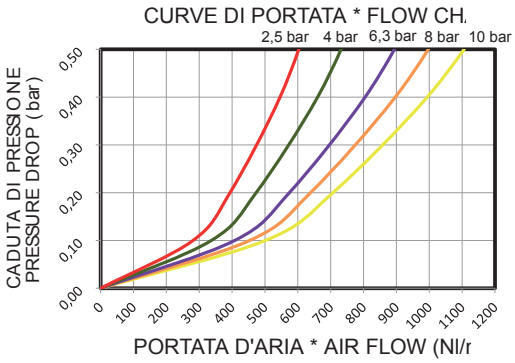

GENERAL TECHNICAL DATA

Fluid	compressed air
Maximum inlet pressure	16 Bar
Filtering cartridge	activated carbon
Life of cartridge	Replacement against pressure drop higher than 0,75 bar. Anyhow, do not exceed 2,000 working hours. Saturation of activated carbon may not cause pressure drop.
Reference flow rate	see the flow chart
Working temperature (a 10 bar)	-5 / +50°C
Max Torque G1/4" IN-OUT	25 Nm
Weight	0,10 kg

ORDERING CODE

CODE	REF.
042.02.00300	CF 042 1/4 CA TT
042.02.00301	CF 042 1/4 CA TC (short bowl)
042.02.00302	CF 042 1/4 CA PE

GUIDE TO REFERENCES

F 1/4" 042 20 PE SS

Product
- **F** = Filter
- **MF** = Microfilter
- **CF** = Activated carbon

Connection
- **1/4"** = G 1/4"
- **3/8"** = G 3/8"
- **1/2"** = G 1/2"
- **3/4"** = G 3/4"
- **1"** = G 1"

Line
- **042**
- **050**
- **052**
- **075**
- **080**
- **095**

Filtering element
- **5** = 5 micron
- **20** = 20 micron
- **0,01** = 0,01 micron
- **CA** = Activated carbon

Bowl
- **TT** = Transparent (Line 042 only)
- **TC** = Short transparent (Line 042 only)
- **PE** = With outer guard

Condensate Drain
- **SS** = Semiautomatic (standard)
- **SA** = Automatic float type
- **SAD** = Automatic differential
- **S18** = Open seat 1/8 F

COMPONENTI

1. **Body** - resina acetalica + brass
2. **Carbon filter cartridge**
3. **O-ring** - NBR
4. **Bowl** - Toughened PA

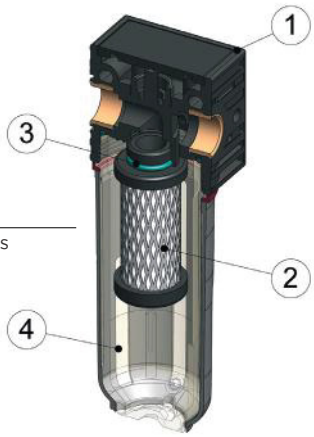

LINE 042 1/4" | LUBRICATORS

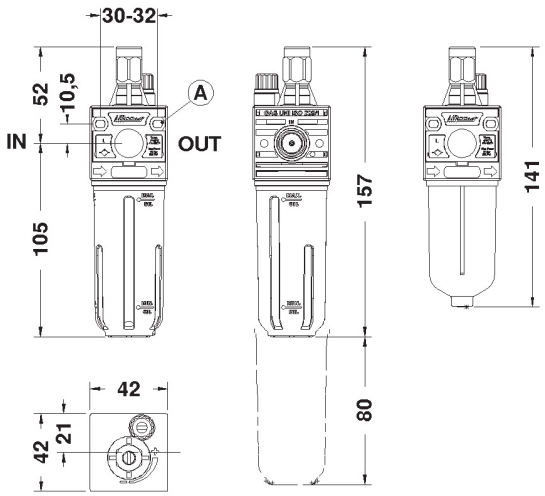

PE and TT version. TC version

GENERAL FEATURES

Propotional oil mist lubricator allowing a constant oil delivery over time.
Oil suction even under low flow rate with high sensitivity in the lubricant adjustment.
Oil filling plug.
It can be wall mounted through the holes prearranged on the body.
Closed bowl (without drain) made from hardened polyamide, available in following configurations: TT = transparent; PE = outer guard; TC = short transparent.

GENERAL TECHNICAL DATA

Maximum inlet pressure	16 Bar
Bowl capacity	TT= 42cc; PE=42cc; TC=32cc
Recommended oil viscosity	ISO VG32
Reference flow rate (P1= 10 bar ΔP= 1 bar)	2.060 Nl/min
Working temperature (a 10 bar)	-5 / +50°C*
Max Torque G1/4" IN-OUT	25 Nm
Weight	0,095 kg

Below 3°C the air of the circuit must be free from humidity

ORDERING CODE

CODE	REF.
042.03.*****	L 1/4" 042 TT
042.03.00072	L 1/4" 042 PE
042.03.00078	L 1/4" 042 TC (short bowl)

MINIMUM OPERATING FLOW RATE

INLET PRESSURE			MINIMUM AIR FLOW RATE		
Psi	**MPa**	**Bar**	**dm³/s (ANR)**	**Nl/1' (ANR)**	**SCFM**
36	0,25	2,50	0,36	22	0.77
58	0,40	4,00	0,43	26	0.92
91	0,63	6,30	0,50	30	1.05

CURVE DI PORTATA *FLOW CHARTS

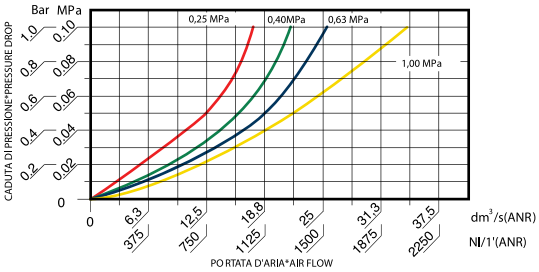

GUIDE TO REFERENCES

L 1/4" 042 PE

Product
- **L** = Lubricator

Connection
- **1/4"** = G 1/4"
- **3/8"** = G 3/8"
- **1/2"** = G 1/2"
- **3/4"** = G 3/4"
- **1"** = G 1"

Line
- **042**
- **050**
- **052**
- **075**
- **080**
- **095**

Version
- = Standard
- **VL** = Vacuum filling
- **IL** = Min Level indicator
- **IM** = Max/Min Level indicator (Line 095 only)

Bowl
- **TT** = Transparent (Line 042 only)
- **TC** = Short transparent (Line 042 only)
- **PE** = With outer guard

FLUIDTECHNIK bohemia 30 LET

LINE 042 1/4" | VL VACUUM FILLING LUBRICATORS

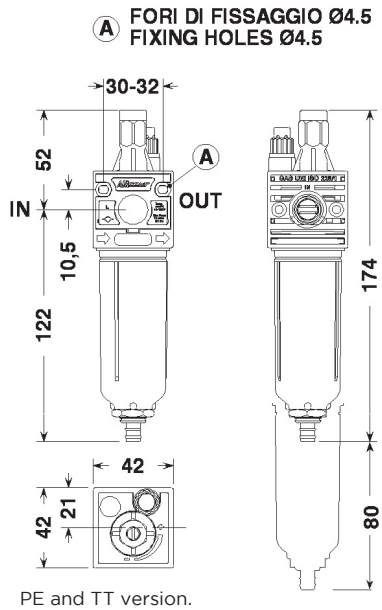

PE and TT version.

GENERAL FEATURES

Propotional oil mist lubricator with oil filling from an external tank without interrupting the operation of the system.
Oil suction even under low flow rate with high sensitivity in the lubricant adjustment.
It can be wall mounted through the holes prearranged on the body.
Closed bowl (without drain) made from hardened polyamide, available in following configurations: TT = transparent; PE = outer guard; TC = short transparent.

GENERAL TECHNICAL DATA

Maximum inlet pressure	16 Bar
Minimum working pressure	4 Bar
Bowl capacity	TT= 42cc; PE=42cc
Recommended oil viscosity	ISO VG32
Reference flow rate (P1= 10 bar ΔP= 1 bar)	2.060 Nl/min
Working temperature (a 10 bar)	-5 / +50°C*
Max Torque G1/4" IN-OUT	25 Nm
Weight	0,14 kg

Below 3°C the air of the circuit must be free from humidity

ORDERING CODE

CODE	REF.
042.03.00500	L 1/4" 042 TT VL
042.03.00501	L 1/4" 042 PE VL

MINIMUM OPERATING FLOW RATE

INLET PRESSURE			MINIMUM AIR FLOW RATE		
Psi	**MPa**	**Bar**	**dm3/s (ANR)**	**Nl/11 (ANR)**	**SCFM**
36	0,25	2,50	0,36	22	0.77
58	0,40	4,00	0,43	26	0.92
91	0,63	6,30	0,50	30	1.05

CURVE DI PORTATA *FLOW CHARTS

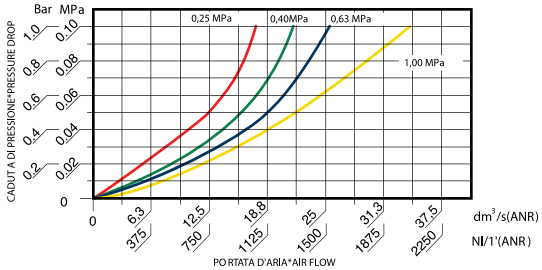

GUIDE TO REFERENCES

L 1/4" 042 PE

Product
- **L** = Lubricator

Connection
- **1/4"** = G 1/4"
- **3/8"** = G 3/8"
- **1/2"** = G 1/2"
- **3/4"** = G 3/4"
- **1"** = G 1"

Line
- **042**
- **050**
- **052**
- **075**
- **080**
- **095**

Version
- Standard
- **VL** = Vacuum filling
- **IL** = Min Level indicator
- **IM** = Max/Min Level indicator (Line 095 only)

Bowl
- **TT** = Transparent (Line 042 only)
- **TC** = Short transparent (Line 042 only)
- **PE** = With outer guard

FUNCTIONING VL

The oil filling is achieved by pressing and holding the button at the base of the lubricator body.
The "Venturi" system causes a vacuum inside the bowl and the related oil intake.
The oil fillling is stopped only upon releasing the button.
The oil level is visually checked during the filling.
Max. suction height : 1,5 m.

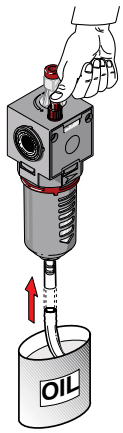

LINE 042 1/4" | FILTER REGULATORS

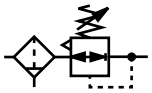

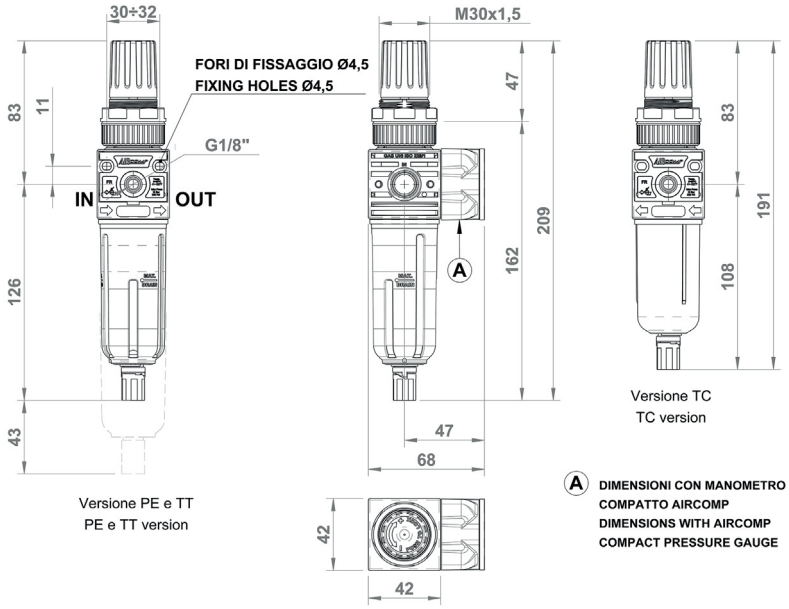

GENERAL FEATURES

High performance modular filter regulator ensuiriung big flow rate and low load loss.
Relieving for a quick exhaust of the downstream overpressure.
Knob with locking pressure device.
Equipped with semiautomatic drain as standard (SS).

GENERAL TECHNICAL DATA

Pressure range	0-4; 0-8; 0-12 Bar
Maximum inlet pressure	16 Bar
Drain working pressure	mod. SS: 0,5 – 16 Bar mod. SA: 1,5 – 10 Bar mod. SAD: 2 – 12 Bar
Filtering degree	5 micron; 20 micron
Reference flow rate (P1= 6,3 bar ΔP= 1 bar)	1.200 Nl/min
Working temperature (a 10 bar)	-5 / +50°C*
Max Torque G1/4" IN-OUT	25 Nm
Max tourque gauge port	**round:** 1 Nm **compact:** manual
Bowl capacity	TT = 22cc; PE = 22cc; TC = 15cc
Weight	0,125 kg

Below 3°C the air of the circuit must be free from humidity

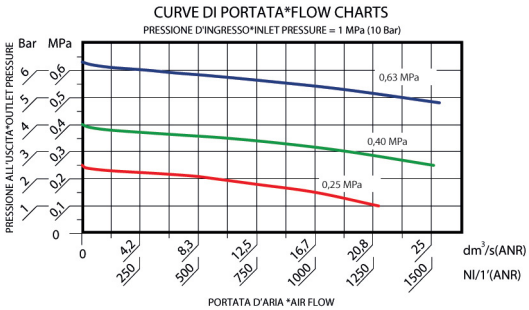

ORDERING CODE

CODE	REF.
042.04.*****	FR 1/4" 042 20 08 R TT SS
042.04.00052	FR 1/4" 042 20 12 R TT SS
042.04.00113	FR 1/4" 042 5 08 R TT SS
042.04.00114	FR 1/4" 042 5 12 R TT SS
042.04.00133	FR 1/4" 042 20 08 R TC SS (short bowl)
042.04.00230	FR 1/4" 042 5 08 R TC SS (short bowl)
042.04.00072	FR 1/4" 042 20 08 R PE SS
042.04.00127	FR 1/4" 042 20 12 R PE SS
042.04.00129	FR 1/4" 042 5 08 R PE SS
042.04.00130	FR 1/4" 042 5 12 R PE SS
Float type automatic drain version.	
042.04.00151	FR 1/4" 042 20 08 R TT SA
042.04.00154	FR 1/4" 042 5 08 R TT SA
042.04.00157	FR 1/4" 042 20 08 R PE SA
042.04.00160	FR 1/4" 042 5 08 R PE SA
"Differential" automatic drain version.	
042.04.00238	FR 1/4" 042 20 08 R TT SAD
042.04.00240	FR 1/4" 042 5 08 R TT SAD
042.04.00242	FR 1/4" 042 20 08 R PE SAD
042.04.00244	FR 1/4" 042 5 08 R PE SAD

GUIDE TO REFERENCES

FR 1/4" 042 20 08 R PE SS

Product
- **FR** = Filter regulator

Connection
- **1/4"** = G 1/4"
- **3/8"** = G 3/8"
- **1/2"** = G 1/2"
- **3/4"** = G 3/4"
- **1"** = G 1"

Line
- **042**
- **050**
- **052**
- **075**
- **080**
- **095**

Filtering element
- **5** = 5 micron
- **20** = 20 micron

Condensate Drain
- **SS** = Semiautomatic (standard)
- **SA** = Automatic float type
- **SAD** = Automatic differential
- **S18** = Open seat 1/8 F

Tazza
- **TT** = Transparent (Line 042 only)
- **TC** = Short transparent (Line 042 only)
- **PE** = With outer guard

Version
- **R** = Relieving

Range of pressure
- **04** = 0 - 4 Bar
- **08** = 0 - 8 Bar
- **12** = 0 - 12 Bar

WOULD YOU LIKE TO ORDER THE REGULATOR COMPLETE WITH GAUGE?

Replace 0 with "M" the the 6th digit of the part nr. for example:

042.04.M0072 FR 1/4" 042 20 08R PE SS + GAUGE

FLUIDTECHNIK bohemia 3C LET

LINE **042 1/4"** | 3-WAY VALVES WITH LOCK

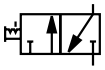

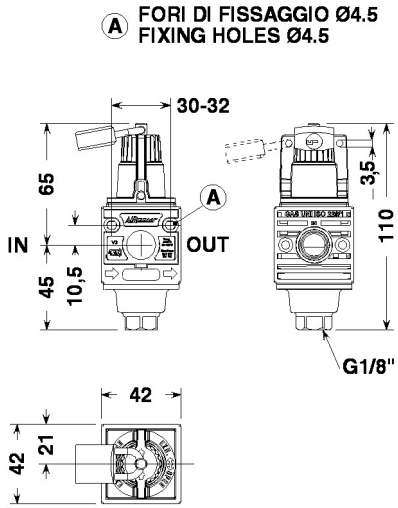

GENERAL FEATURES

The job of the 3-way on-off valve is to shut off air supply and exhaust the pressure in the downstream circuit.
Application: it can be used singularly or, more commonly, assembled in battery set. It is actuated for carrying out maintenance operations with total safety, thus avoiding the system from being accidentally pressurized.
The valve is equipped with nr. 1 lock and nr. 2 keys.

GENERAL TECHNICAL DATA

INLET-OUTLET connections	G1/4"
Exhaust connection	G1/8"
Maximum inlet pressure	16 Bar
Reference flow rate (P1= 10 bar ΔP= 1 bar)	1.570 Nl/min
Exhaust flow rate (at 10 bar in open air)	1.000 Nl/min
Working temperature (a 10 bar)	-5 / +50°C*
Max Torque G1/4" IN-OUT	25 Nm
Weight	0,155 kg

Below 3°C the air of the circuit must be free from humidity

ORDERING CODE

CODE	REF.
042.25.00001	V 1/4" 042 V 3

CURVE DI PORTATA *FLOW CHARTS

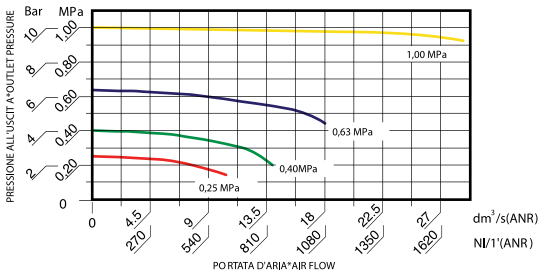

GUIDE TO REFERENCES

V 1/4" 042 3V

Product
V = 3 way Valve

Functioning
3V = 3 Way

Connection
1/4" = G 1/4"
3/8" = G 3/8"
1/2" = G 1/2"
3/4" = G 3/4"

Line
042
050
052
075
080

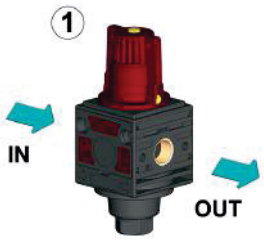

1. with OPEN VALVE

IN and OUT are in communication for an open air flow

2. with CLOSED VALVE

The inlet (IN) is closed while the outlet (OUT) is in communication with the exhaust.

LINE 042 1/4" | ELECTRICAL SHUT-OFF VALVES PILOT 15MM

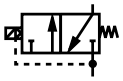

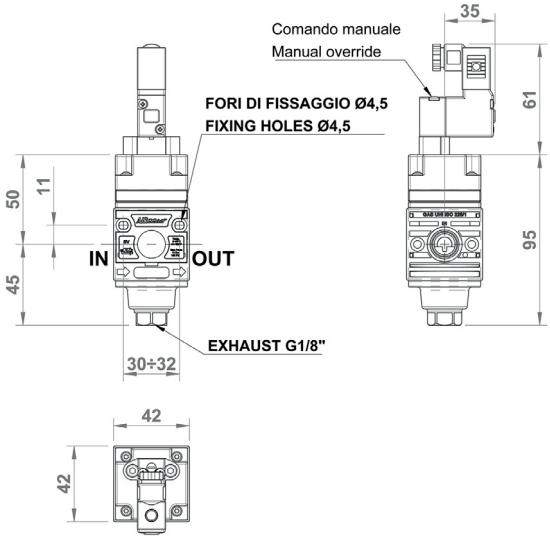

GENERAL FEATURES

The job of the shut-off valve is to close the air supply and exhaust the pressure in the downstream circuit.
The electrical model is often connected to ON-OFF switches or emergency mushrooms on the control consolle.
Application: it can be used singularly or, more commonly, assembled in battery set. It is actuated for carrying out maintenance operations or for depressurizing circuits in any emergency situation.

GENERAL TECHNICAL DATA

INLET-OUTLET connections	G1/4"
Exhaust connection	G1/8"
Maximum inlet pressure	10 Bar
Minimum working pressure	3 Bar
Reference flow rate (P1= 10 bar ΔP= 1 bar)	1.570 Nl/min
Exhaust flow rate (at 10 bar in open air)	1.000 Nl/min
Working temperature (a 10 bar)	-5 / +50°C*
Max Torque G1/4" IN-OUT	25 Nm
Electric pilot	3/2 NC 15 mm (Microsol type)
Available voltage	24VDC (2,5W); 24VAC; 110VAC; 220VAC (3VA)
Weight	0,20 kg

Below 3°C the air of the circuit must be free from humidity

CURVE DI PORTATA *FLOW CHARTS

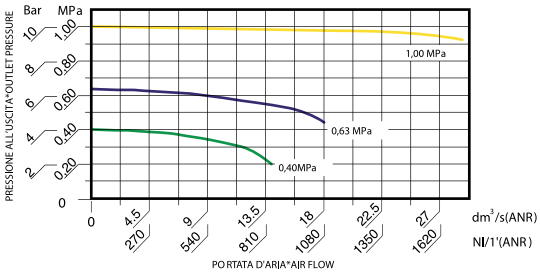

GUIDE TO REFERENCES

SV 1/4" 042 15MM 24VDC

Product
- **SV** = Shut-off valve

Connection
- **1/4"** = G 1/4"
- **3/8"** = G 3/8"
- **1/2"** = G 1/2"
- **3/4"** = G 3/4"

Line
- **042**
- **050**
- **052**
- **075**
- **080**

Voltage
- **12 VDC**
- **24 VDC**
- **24 VAC**
- **110 VAC**
- **220 AC**

Version
- **15MM** = Solenoid pilot 15 mm
- **CNOM** = Electric controlC-NOMO
- **PNEU** = Pneumatic

ORDERING PART NR. COMPLETE UNIT

CODE	REF.
042.26.00102	SV 1/4 042 15MM 12V DC
042.26.00202	SV 1/4 042 15MM 24V DC
042.26.00602	SV 1/4 042 15MM 24V AC
042.26.00702	SV 1/4 042 15MM 110V AC
042.26.00802	SV 1/4 042 15MM 220V AC

ORDERING PART NR. SEPARATE COMPONENTS

CODE	REF.
C50.26.00002	KIT C. ELECTR. 3/2 NC 2,5W 24V DC
C50.26.00003	KIT C. ELECTR. 3/2 NC 3W 24V AC
C50.26.00004	KIT C. ELECTR. 3/2 NC 3W 110V AC
C50.26.00005	KIT C. ELECTR. 3/2 NC 3W 220V AC
042.26.00002	SV 1/4" 042 PRED. C. ELECTR. MICROSOL/PNEUM

FUNCTIONING

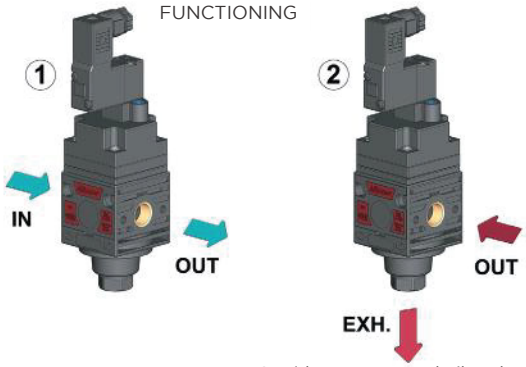

1. with actuated pilot, the SV is open (IN-OUT communication)

2. with non-actuated pilot, the SV is closed (IN closed / OUT exhausting)

FLUIDTECHNIK bohemia 3C LET

LINE 042 1/4" | ELECTRICAL SHUT-OFF VALVES CNOMO

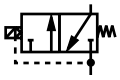

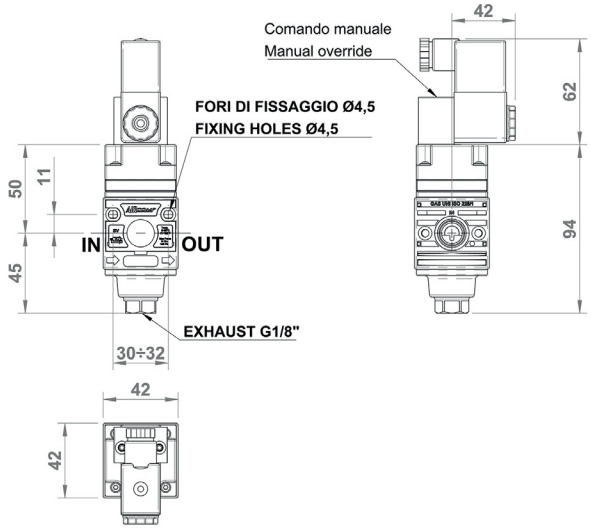

GENERAL FEATURES

The job of the shut-off valve is to close the air supply and exhaust the pressure in the downstream circuit.
The electrical model is often connected to ON-OFF switches or emergency mushrooms present on the control consolle.
Application: it can be used singularly, or more commonly, assembled in battery set. It is actuated for carrying out maintenance operations or for depressurizing the circuit.

GENERAL TECHNICAL DATA

INLET-OUTLET connections	G1/4"
Exhaust connection	G1/8"
Maximum inlet pressure	10 Bar
Minimum working pressure	3 Bar
Reference flow rate (P1= 10 bar ΔP= 1 bar)	1.570 Nl/min
Exhaust flow rate (at 10 bar in open air)	1.000 Nl/min
Working temperature (a 10 bar)	-5 / +50°C
Max Torque G1/4" IN-OUT	25 Nm
Electric pilot	3/2 NC (tipo CNOMO) for coil 22mm
Available voltage	24VDC (3W); 24VAC; 110VAC; 220VAC (5VA)
Weight	0,28 kg

Below 3°C the air of the circuit must be free from humidity

CURVE DI PORTATA *FLOW CHARTS

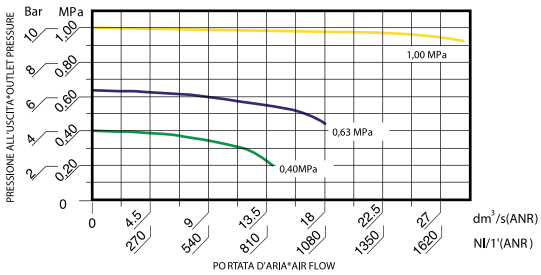

GUIDE TO REFERENCES

SV 1/4" 042 15MM 24VDC

Product
SV = Shut-off valve

Connection
1/4" = G 1/4"
3/8" = G 3/8"
1/2" = G 1/2"
3/4" = G 3/4"

Line
042
050
052
075
080

Voltage
12 VDC
24 VDC
24 VAC
110 VAC
220 AC

Version
15MM = Solenoid pilot 15 mm
CNOM = Electric controlC-NOMO
PNEU = Pneumatic

ORDERING PART NR. COMPLETE UNIT

CODE	REF.
042.26.00101	SV 1/4 042 CNOM 12V DC
042.26.00201	SV 1/4 042 CNOM 24V DC
042.26.00601	SV 1/4 042 CNOM 24V AC
042.26.00701	SV 1/4 042 CNOM 110V AC
042.26.00801	SV 1/4 042 CNOM 220V AC

ORDERING PART NR. SEPARATE COMPONENTS

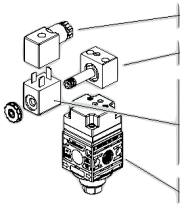

CODE	REF.
A50.26.00010	CONNETTORE
C40.26.00011	C. ELECTR. EV 3/2 NC CNOMO
A50.26.00006	SOL. 3W 24V
A50.26.00007	SOL. 5VA 24V DC
A50.26.00008	SOL. 5VA 110V AC
A50.26.00009	SOL. 5VA 220V AC
042.26.00001	SV 1/4" 042 PRED. C. ELECTR. CNOMO

FUNCTIONING

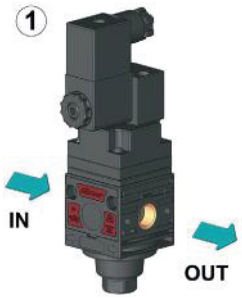

1. with actuated pilot, the SV is open (IN-OUT communication)

2. with piloting not under pressure, the SV is closed (IN closed / OUT exhausting)

LINE **042 1/4"** | PNEUMATIC SHUT-OFF VALVES

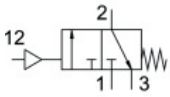

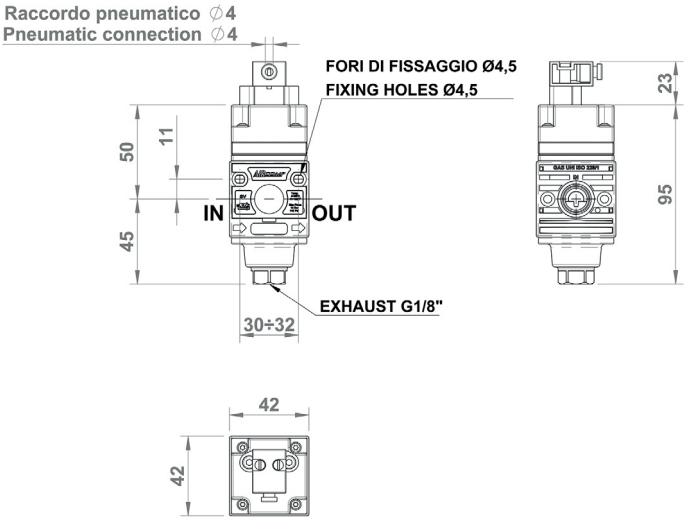

GENERAL FEATURES

The job of the shut-off valve is to close the air supply and exhaust the pressure in the downstream circuit.
The pneumatic model is often connected to mushrooms actuators present on the control consolle.
Application: it can be used singularly or, more commnly, assembled in battery set. It is actuated for depressurizing the circuit.

GENERAL TECHNICAL DATA

INLET-OUTLET connections	G1/4"
Exhaust connection	G1/8"
Maximum inlet pressure	10 Bar
Minimum working pressure	3 Bar
Reference flow rate (P1= 10 bar ΔP= 1 bar)	1.570 Nl/min
Exhaust flow rate (at 10 bar in open air)	1.000 Nl/min
Working temperature (a 10 bar)	-5 / +50°C*
Max Torque G1/4" IN-OUT	25 Nm
Pneumatic connection	push-in fitting D. 4mm
Weight	0,189 kg

Below 3°C the air of the circuit must be free from humidity

CURVE DI PORTATA *FLOW CHARTS

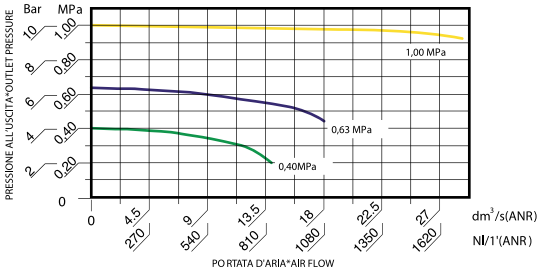

GUIDE TO REFERENCES

SV 1/4" 042 15MM 24VDC

Product
- **SV** = Shut-off valve

Connection
- **1/4"** = G 1/4"
- **3/8"** = G 3/8"
- **1/2"** = G 1/2"
- **3/4"** = G 3/4"

Line
- **042**
- **050**
- **052**
- **075**
- **080**

Voltage
- **12 VDC**
- **24 VDC**
- **24 VAC**
- **110 VAC**
- **220 AC**

Version
- **15MM** = Electric control 15 mm
- **CNOM** = Electric controlC-NOMO
- **PNEU** = Pneumatic

ORDERING PART NR. COMPLETE UNIT

CODE	REF.
042.26.00902	SV 1/4 042 PNEUMATIC

ORDERING PART NR. SEPARATE COMPONENTS

CODE	REF.
C40.26.00014	PNEUMATIC CONTROL KIT
042.26.00002	SV VALVE BODY PRESET 15mm/PNEU

FUNCTIONING

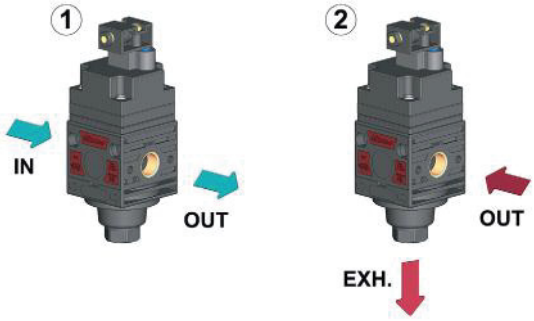

1. with piloting under pressure, the SV is open (IN-OUT communication)

2, with piloting not under pressure, the SV is closed (IN closed / OUT exhausting)

FLUIDTECHNIK® bohemia 3C LET

LINE 042 1/4" | SLOW-START VALVES

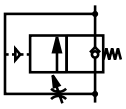

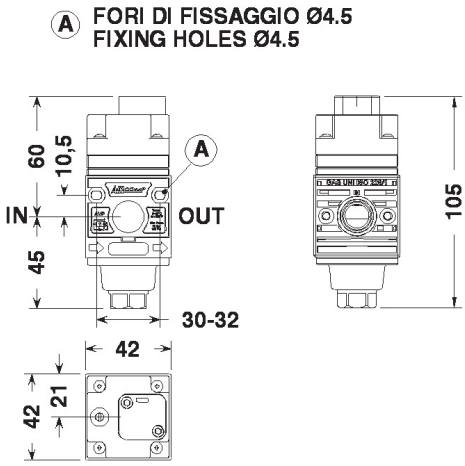

GENERAL FEATURES

The job of the slow-start valve is to gradually pressurize the pneumatic system upon switching it on.
The gradual pressurization takes place until about 60% of the supply pressure is reached.
The pressurization time can be adjusted through the speed controller positioned in the upper part of the body.
Application: it can be singularly used, or, more commonly, assembled with the shut-off valve. The AVP avoids any dangerous pressure surge, that may be caused by quickly supplying the system to the working pressure.

GENERAL TECHNICAL DATA

INLET-OUTLET connections	G1/4"
Maximum inlet pressure	10 Bar
Minimum working pressure	3 Bar
Reference flow rate (P1= 10 bar ΔP= 1 bar)	1.570 Nl/min
Working temperature (a 10 bar)	-5 / +50°C*
Max Torque G1/4" IN-OUT	25 Nm
Weight	0,136 kg

Below 3°C the air of the circuit must be free from humidity

CURVE DI PORTATA *FLOW CHARTS

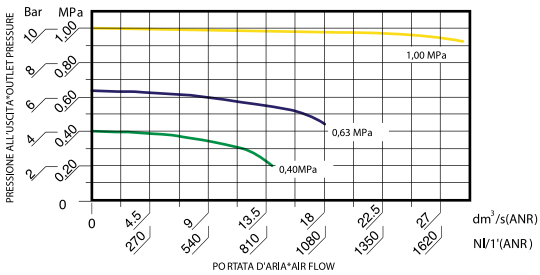

ORDERING CODE

CODE	REF.
042.27.00001	AVP 1/4" 042 PN Autonom.

GUIDE TO REFERENCES

AVP 1/4" 042 PN

Product
AVP = Slow-start valve

Connection
1/4" = G 1/4"
3/8" = G 3/8"
1/2" = G 1/2"
3/4" = G 3/4"

Line
042
050
052
075
080

Functioning
PN = Pneumatic

LINE 042 1/4" | SHUT-OFF/SLOW START COMBINATIONS

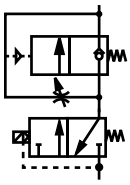

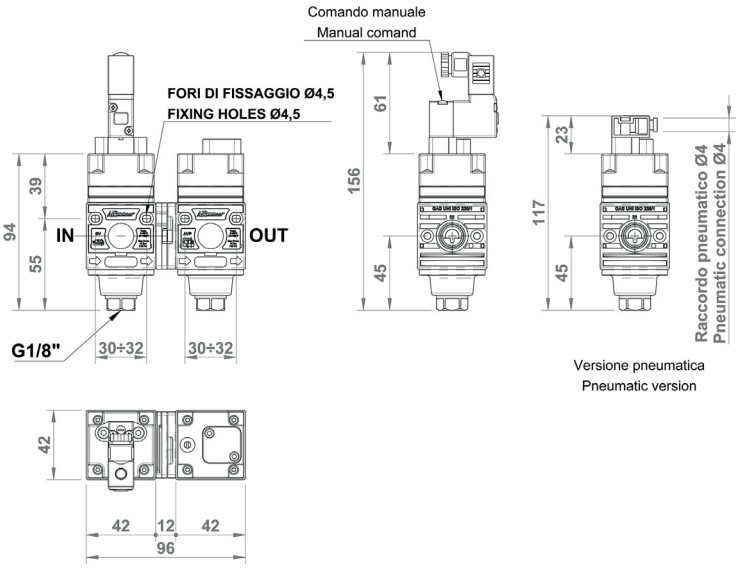

GENERAL FEATURES

SVAV is a set consisting of shut-off valve (SV) and slow-start valve (AVP), assembled and equipped with electric or pneumatic control.
This complete unit, combines the functions of exhausting the pneumatic circuit and cutting-off air supply (SV) with the progressive pressurization provided by the slow-start valve (AVP).
The valves are available with electric control in different voltages or with pneumatic control.
The proposed set is ready to be subsequently assembled with other Aircomp modules, or singularly mounted.
For further information about SV and AVP, please refer to the respective datasheets.

GENERAL TECHNICAL DATA

INLET-OUTLET connections	G1/4"
Exhaust connection	G1/8"
Maximum inlet pressure	10 Bar
Minimum working pressure	3 Bar
Reference flow rate (P1= 10 bar ΔP= 1 bar)	1.570 Nl/min
Exhaust flow rate (at 10 bar in open air)	1.000 Nl/min
Working temperature (a 10 bar)	-5 / +50°C*
Max Torque G1/4" IN-OUT	25 Nm
Electric pilot	3/2 NC 15 mm (Microsol type)
Available voltage	24VDC (2,5W); 24VAC; 110VAC; 220VAC (3VA)
Pneumatic connection	push-in fitting D. 4mm
SVAV E Weight	0,365 kg
SVAV P Weight	0,325 kg

Below 3°C the air of the circuit must be free from humidity

GUIDE TO REFERENCES

SVAV 1/4" 042 E 24VDC

Product
SVAV = SV+AVP

Connection
1/4" = G1/4"

Line
042

Special type
24VDC
24VAC
110VAC
220VAC

Version
E = Electric
P = Pneumatic

ORDERING PART NR.ELECTRIC VERSION

CODE	REF.
042.28.00001	SVAV 1/4 042 E 24 VDC
042.28.00002	SVAV 1/4 042 E 24 VAC
042.28.00003	SVAV 1/4 042 E 110 VAC
042.28.00004	SVAV 1/4 042 E 220 VAC

ORDERING PART NR. PNEUMATIC VERSION

CODE	REF.
042.28.00005	SVAV 1/4 042 P Ø4

LINE 042 1/4" | FR+L UNITS

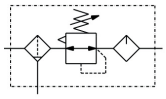

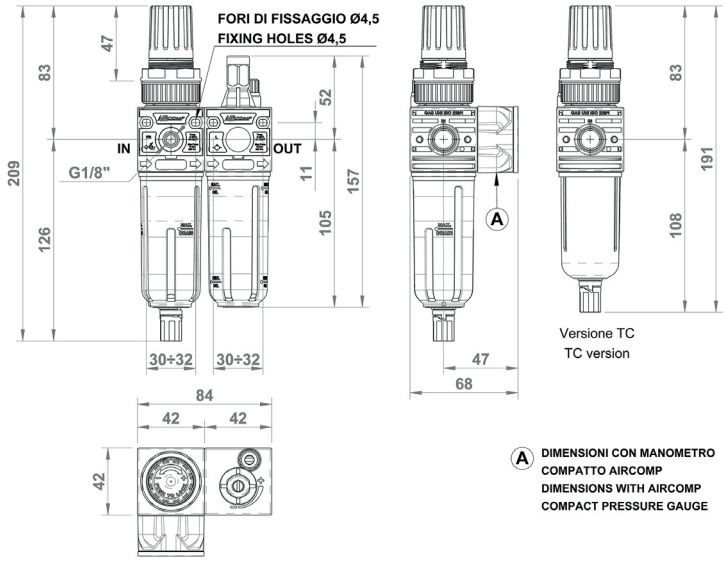

GENERAL FEATURES

Unit consisting of Filter regulator and Lubricator.

GENERAL TECHNICAL DATA

Pressure range	0-4; 0-8; 0-12 Bar
Maximum inlet pressure	16 Bar
Drain working pressure	mod. SS: 0,5 – 16 Bar mod. SA: 1,5 – 10 Bar mod. SAD: 2 – 12 Bar
Filtering degree	5 micron; 20 micron
Reference flow rate (P1= 6,3 bar ΔP= 1 bar)	980 Nl/min
Working temperature (a 10 bar)	-5 / +50°C*
Max Torque G1/4" IN-OUT	25 Nm
Max tourque gauge port	**round:** 1 Nm **compact:** manual
Weight	0,32 kg

Below 3°C the air of the circuit must be free from humidity

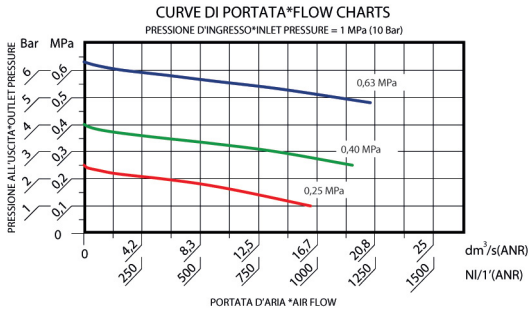

ORDERING CODE

CODE	REF.
042.06.***	FR+L 1/4" 042 20 08 R TT SS
042.06.00052	FR+L 1/4" 042 20 12 R TT SS
042.06.00115	FR+L 1/4" 042 5 08 R TT SS
042.06.00116	FR+L 1/4" 042 5 12 R TT SS
042.06.00124	FR+L 1/4" 042 20 08 R TC SS
042.06.00132	FR+L 1/4" 042 20 12 R TC SS
042.06.00133	FR+L 1/4" 042 5 08 R TC SS
042.06.00134	FR+L 1/4" 042 5 12 R TC SS
042.06.00500	FR+L 1/4" 042 20 08 R TT SS VL
042.06.00504	FR+L 1/4" 042 20 12 R TT SS VL
042.06.00072	FR+L 1/4" 042 20 08 R PE SS
042.06.00126	FR+L 1/4" 042 20 12 R PE SS
042.06.00128	FR+L 1/4" 042 5 08 R PE SS
042.06.00129	FR+L 1/4" 042 5 12 R PE SS
042.06.00501	FR+L 1/4" 042 20 08 R PE SS VL
042.06.00505	FR+L 1/4" 042 20 12 R PE SS VL
Float type automatic drain version.	
042.06.00151	FR+L 1/4" 042 20 08 R TT SA
042.06.00153	FR+L 1/4" 042 20 12 R TT SA
042.06.00157	FR+L 1/4" 042 20 08 R PE SA
042.06.00159	FR+L 1/4" 042 20 12 R PE SA
"Differential" automatic drain version.	
042.06.00191	FR+L 1/4" 042 20 08 R TT SAD
042.06.00192	FR+L 1/4" 042 20 12 R TT SAD
042.06.00501	FR+L 1/4" 042 20 08 R PE SAD
042.06.00505	FR+L 1/4" 042 20 12 R PE SAD

GUIDE TO REFERENCES

FR+L 1/4" 042 20 08 R PE SS

Product
- **FR+L** = Filter regulator + Lubricator

Connection
- **1/4"** = G 1/4"
- **3/8"** = G 3/8"
- **1/2"** = G 1/2"
- **3/4"** = G 3/4"
- **1"** = G 1"

Line
- **042**
- **050**
- **052**
- **075**
- **080**
- **095**

Filtering element
- **5** = 5 micron
- **20** = 20 micron

Range of pressure
- **04** = 0 - 4 Bar
- **08** = 0 - 8 Bar
- **12** = 0 - 12 Bar

Version
- **R** = Relieving

Bowl
- **TT** = Transparent (Line 042 only)
- **TC** = Short transparent (Line 042 only)
- **PE** = With outer guard

Condensate Drain
- **SS** = Semiautomatic (standard)
- **SA** = Automatic float type
- **SAD** = Automatic differential
- **S18** = Open seat 1/8 F

WOULD YOU LIKE TO ORDER THE REGULATOR COMPLETE WITH GAUGE?

Replace 0 with "M" the the 6th digit of the part nr. for example:

042.06.M0072 FR+L 1/4" 042 20 08R PE SS + GAUGE

LINE **042 1/4"** | F + R + L UNITS

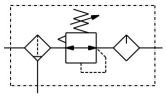

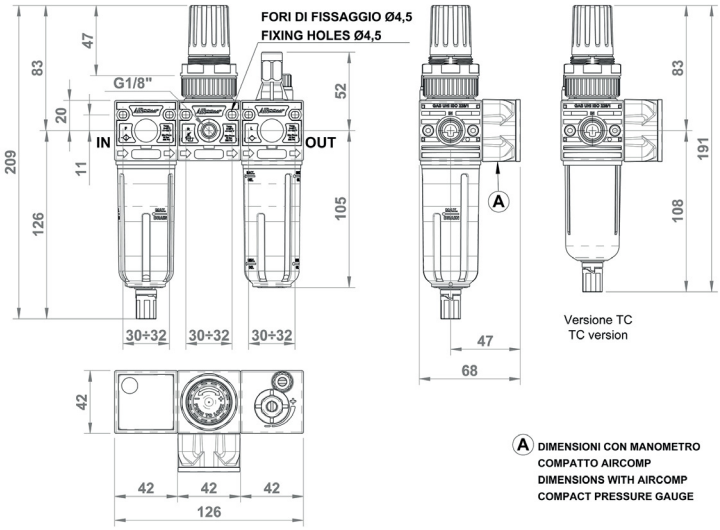

GENERAL FEATURES

Unit consisting of Filter + Regualtor + Lubricator.
It combines the functions of filtration, pressure regulation and lubrication of compressed air for industrial applications.
Set delivering big flow rate and regulation sensitivity, filtration with high condensate separation.
It is equipped with semiautomatic drain as standard (SS).

GENERAL TECHNICAL DATA

Pressure range	0-4; 0-8; 0-12 Bar
Maximum inlet pressure	16 Bar
Drain working pressure	mod. SS: 0,5 – 16 Bar mod. SA: 1,5 – 10 Bar mod. SAD: 2 – 12 Bar
Filtering degree	5 micron; 20 micron
Reference flow rate (P1= 6,3 bar ΔP= 1 bar)	980 Nl/min
Working temperature (a 10 bar)	-5 / +50°C*
Max Torque G1/4" IN-OUT	25 Nm
Max tourque gauge port	**round:** 1 Nm
	compact: manual
Weight	0,35 kg

Below 3°C the air of the circuit must be free from humidity

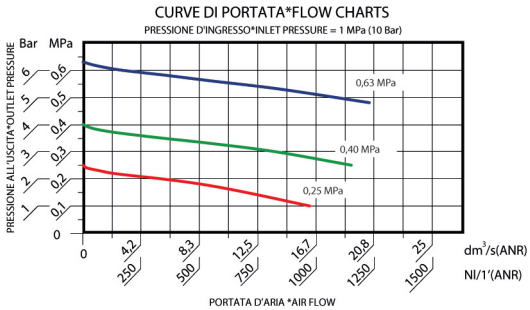

ORDERING CODE

CODE	REF.
42.05.*****	F+R+L 1/4" 042 20 08 R TT SS
042.05.00103	F+R+L 1/4" 042 20 12 R TT SS
042.05.00105	F+R+L 1/4" 042 5 08 R TT SS
042.05.00170	F+R+L 1/4" 042 20 08 R TC SS
042.05.00172	F+R+L 1/4" 042 5 08 R TC SS
042.05.00500	F+R+L 1/4" 042 20 08 R TT SS VL
042.05.00504	F+R+L 1/4" 042 20 12 R TT SS VL
042.05.00118	F+R+L 1/4" 042 20 08 R PE SS
042.05.00114	F+R+L 1/4" 042 20 12 R PE SS
042.05.00116	F+R+L 1/4" 042 5 08 R PE SS
042.05.00117	F+R+L 1/4" 042 5 12 R PE SS
042.05.00501	F+R+L 1/4" 042 20 08 R PE SS VL
Float type automatic drain version.	
042.05.00151	F+R+L 1/4" 042 20 08 R TT SA
042.05.00157	F+R+L 1/4" 042 20 08 R PE SA
"Differential" automatic drain version.	
042.05.00166	F+R+L 1/4" 042 20 08 R TT SAD
042.05.00168	F+R+L 1/4" 042 20 08 R PE SAD

GUIDE TO REFERENCES

F+R+L 1/4" 042 20 08 R PE SS

Product
- **F+R+L** = Filter + Regulator + Lubricator

Connection
- **1/4"** = G 1/4"
- **3/8"** = G 3/8"
- **1/2"** = G 1/2"
- **3/4"** = G 3/4"
- **1"** = G 1"

Line
- **042**
- **050**
- **052**
- **075**
- **080**
- **095**

Filtering element
- **5** = 5 micron
- **20** = 20 micron

Range of pressure
- **04** = 0 - 4 Bar
- **08** = 0 - 8 Bar
- **12** = 0 - 12 Bar

Version
- **R** = Relieving

Tazza
- **TT** = Transparent (Line 042 only)
- **TC** = Short transparent (Line 042 only)
- **PE** = With outer guard

Condensate Drain
- **SS** = Semiautomatic (standard)
- **SA** = Automatic float type
- **SAD** = Automatic differential
- **S18** = Open seat 1/8 F

WOULD YOU LIKE TO ORDER THE REGULATOR COMPLETE WITH GAUGE?

Replace 0 with "M" the the 6th digit of the part nr. for example:

042.05.M0118 F+R+L 1/4" 042 20 08R PE SS + GAUGE

LINE 042 1/4" | V3 + FR + L UNITS

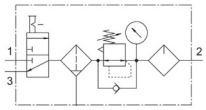

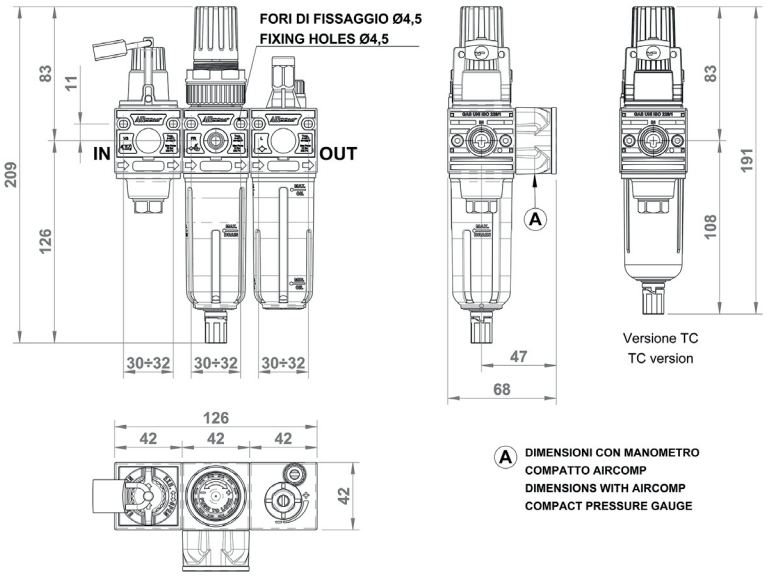

GENERAL FEATURES

Unit consisting of 3-way Valve (V3) + Filter regulator (FR) + Lubricator (L).
It combines the function of shutting-off the system along with the filtration, pressure regulation and lubrication of compressed air for industrial applications.
Lockable V3 valve for greater safety during maintenance operations.
It is equipped with semiautomatic drain as standard (SS).

GENERAL TECHNICAL DATA

Pressure range	0-4; 0-8; 0-12 Bar
Maximum inlet pressure	16 Bar
Drain working pressure	mod. SS: 0,5 – 16 Bar mod. SA: 1,5 – 10 Bar mod. SAD: 2 – 12 Bar
Filtering degree	5 micron; 20 micron
Reference flow rate (P1= 6,3 bar ΔP= 1 bar)	980 Nl/min
Working temperature (a 10 bar)	-5 / +50°C*
Max Torque G1/4" IN-OUT	25 Nm
Max tourque gauge port	**round:** 1 Nm **compact:** manual
Weight	0,464 kg

Below 3°C the air of the circuit must be free from humidity

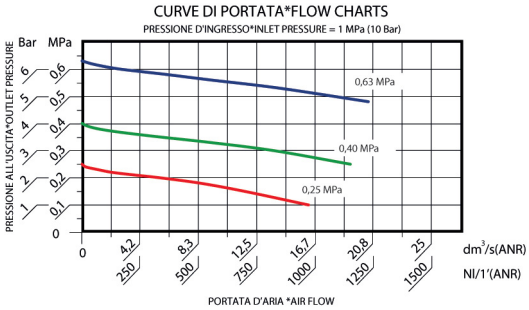

ORDERING CODE

CODE	REF.
042.36.*****	V3+FR+L 1/4" 042 20 08 R TT SS
042.36.00115	V3+FR+L 1/4" 042 5 08 R TT SS
042.36.00130	V3+FR+L 1/4" 042 20 08 R TC SS
042.36.00132	V3+FR+L 1/4" 042 5 08 R TC SS
042.36.00500	V3+FR+L 1/4" 042 20 08 R TT SS VL
042.36.00072	V3+FR+L 1/4" 042 20 08 R PE SS
042.36.00126	V3+FR+L 1/4" 042 20 12 R PE SS
042.36.00128	V3+FR+L 1/4" 042 5 08 R PE SS
042.36.00501	V3+FR+L 1/4" 042 20 08 R PE SS VL
Float type automatic drain version.	
042.36.00151	V3+FR+L 1/4" 042 20 08 R TT SA
042.36.00153	V3+FR+L 1/4" 042 20 12 R TT SA
042.36.00157	V3+FR+L 1/4" 042 20 08 R PE SA
"Differential" automatic drain version.	
042.36.00191	V3+FR+L 1/4" 042 20 08 R TT SAD
042.36.00193	V3+FR+L 1/4" 042 20 08 R PE SAD

GUIDE TO REFERENCES

V3+FR+L 1/4" 042 20 08 R PE SS

Product
- **V3+FR+L** = V3 + Filter regulator + Lubricator

Connection
- **1/4"** = G 1/4"
- **3/8"** = G 3/8"
- **1/2"** = G 1/2"
- **3/4"** = G 3/4"
- **1"** = G 1"

Line
- **042**
- **050**
- **052**
- **075**
- **080**
- **095**

Filtering element
- **5** = 5 micron
- **20** = 20 micron

Range of pressure
- **04** = 0 - 4 Bar
- **08** = 0 - 8 Bar
- **12** = 0 - 12 Bar

Version
- **R** = Relieving

Tazza
- **TT** = Transparent (Line 042 only)
- **TC** = Short transparent (Line 042 only)
- **PE** = With outer guard

Condensate Drain
- **SS** = Semiautomatic (standard)
- **SA** = Automatic float type
- **SAD** = Automatic differential
- **S18** = Open seat 1/8 F

WOULD YOU LIKE TO ORDER THE REGULATOR COMPLETE WITH GAUGE?

Replace 0 with "M" the the 6th digit of the part nr. for example:

042.36.M0072 V3+FR+L 1/4" 042 20 08R PE SS + GAUGE

LINE 042 1/4" | F + MF UNITS

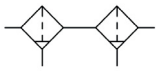

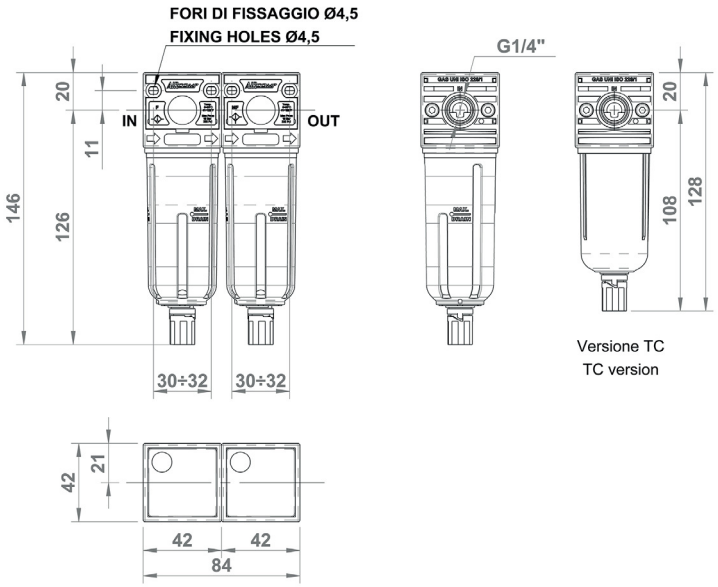

GENERAL FEATURES

Filtration set combining Filter with high condensate separation and coalescing Microfilter.
The job of the Filter is filtering solid particles and condensate separatation. The job of the coalescing Microfilter is to remove oil.
It is equipped with semiautomatic drain as standard (SS).
Available options: float type automatic drain (SA) and differential drain (SAD) that can convey condensate to to the outside even when the bowl is pressurized.
Bowl made from hardened polyamide available in following configurations:
TT = transparent; PE = outer guard; TC= short transparent.

GENERAL TECHNICAL DATA

Maximum inlet pressure	16 Bar
Drain working pressure	mod. SS: 0,5 – 16 Bar mod. SA: 1,5 – 10 Bar mod. SAD: 2 – 12 Bar
Filtering degree Filter	5 micron
Filtering degree Microfilter	0,01 micron
Recommended max flow rate (P1= 10 bar ΔP= 1 bar)	180 Nl/min
Working temperature (a 10 bar)	-5 / +50°C*
Bowl capacity	TT = 22cc; PE = 22cc; TC = 15cc
Max Torque G1/4" IN-OUT	25 Nm
Weight	0,22 kg

Below 3°C the air of the circuit must be free from humidity

ORDERING CODE

CODE	REF.
042.09.00001	F 1/4" 042 5 TT SS+MF 1/4" 0,01 TT SS
042.09.00003	F 1/4" 042 5 PE SS+MF 1/4" 0,01 PE SS
042.09.00005	F 1/4" 042 5 TC SS+MF 1/4" 0,01 TC SS
Float type automatic drain version.	
042.09.00002	F 1/4" 042 5 TT SS+MF 1/4" 0,01 TT SA
042.09.00004	F 1/4" 042 5 PE SS+MF 1/4" 0,01 PE SA
"Differential" automatic drain version.	
042.09.00008	F 1/4" 042 5 TT SS+MF 1/4" 0,01 TT SAD
042.09.00006	F 1/4" 042 5 PE SS+MF 1/4" 0,01 PE SAD

GUIDE TO REFERENCES

F 1/4" 042 5 PE SS +
MF 1/4" 042 0,01 TT SS

Product
- **F** = Filter + Microfilter
- **MF** = Microfilter
- **CF** = Activated carbon

Connection
- **1/4"** = G 1/4"
- **3/8"** = G 3/8"
- **1/2"** = G 1/2"
- **3/4"** = G 3/4"

Line
- **042**
- **050**
- **052**
- **075**
- **080**

Condensate Drain
- **SS** = Semiautomatic (standard)
- **SA** = Automatic float type
- **SAD** = Automatic differential
- **S18** = Open seat 1/8 F

Bowl
- **TT** = Transparent (Line 042 only)
- **TC** = Short transparent (Line 042 only)
- **PE** = With outer guard

Filtering element
- **5** = 5 micron
- **20** = 20 micron
- **0,01** = 0,01 micron

COALESCENT CARTRIDGE

FUNCTIONING

The air with impurity enter into the special high efficiency cartridge, which stops solid particles, captures and joins outside the oil particles (coalescing effect), so that they can easily fall to the bottom of the bowl and be drained outside. In doing so, the filtered air will be free from solid impurities and liquid particles.

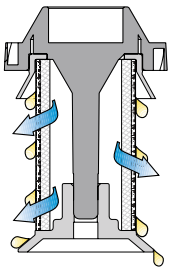

LINE 042 1/4" | F + MF + CF UNITS

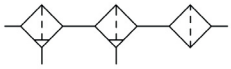

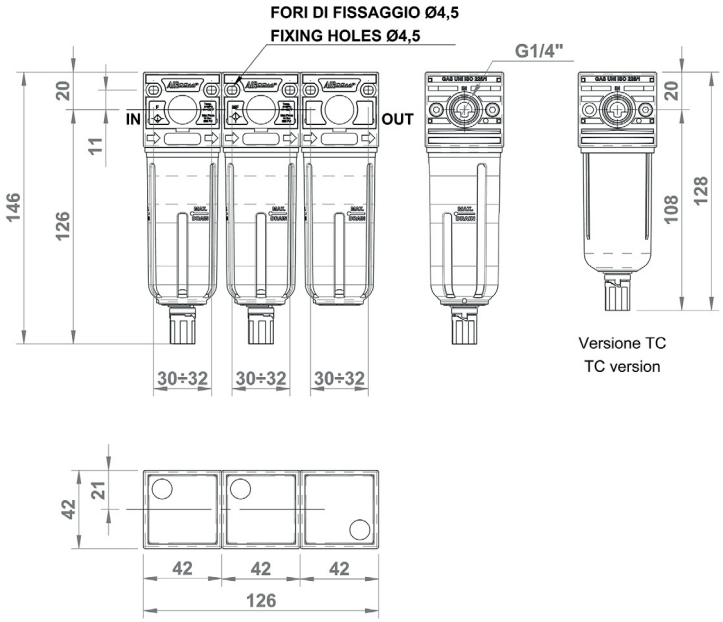

GENERAL FEATURES

Filtration set combining Filter with high condensate separation, coalescing Microfilter and activated carbon Filter.
The job of the unit is to filter solid particles and separate condensate with the Filter along with the coalescing function of the Microfilter, besides removing unpleasant smells in the air circuit aimed at the industrial sector by means of the activated carbon.
It is equipped with semiautomatic drain as standard (SS).
Available options: float type automatic drain (SA) and differential drain (SAD) that can convey condensate to to the outside even when the bowl is pressurized.
Bowl made from hardened polyamide available in following configurations:
TT = transparent; PE = outer guard; TC= short transparent.

GENERAL TECHNICAL DATA

Maximum inlet pressure	16 Bar
Drain working pressure	mod. SS: 0,5 – 16 Bar mod. SA: 1,5 – 10 Bar mod. SAD: 2 – 12 Bar
Filtering degree Filter	5 micron
Filtering degree Microfilter	0,01 micron
Activated carbon cartridge CF	
Recommended max flow rate (P1= 10 bar ΔP= 1 bar)	180 Nl/min
Working temperature (a 10 bar)	-5 / +50°C*
Bowl capacity	TT = 22cc; PE = 22cc; TC = 15cc
Max Torque G1/4" IN-OUT	25 Nm
Weight	0,33 kg

Below 3°C the air of the circuit must be free from humidity

ORDERING CODE

CODE	REF.
042.08.00001	F 5 TT SS+MF 0,01 TTSS+CF TT 1/4 042
042.08.00002	F 5 TT SS+MF 0,01 TTSA+CF TT 1/4 042
042.08.00003	F 5 TT SS+MF 0,01 PESS+CF PE 1/4 042
042.08.00004	F 5 TT SS+MF 0,01PESA+CF PE 1/4 042

GUIDE TO REFERENCES

F	**1/4"**	**042**	**5**	**PE**	**SS**	**+**
MF	**1/4"**	**042**	**0,01**	**PE**	**SS**	**+**
CF	**1/4"**	**042**	**CA**	**PE**		

Product

- **F** = Filter + Microfilter
- **MF** = Microfilter
- **CF** = Activated carbon

Connection

- **1/4"** = G 1/4"
- **3/8"** = G 3/8"
- **1/2"** = G 1/2"
- **3/4"** = G 3/4"

Line

- **042**
- **050**
- **052**
- **075**
- **080**

Filtering element

- **5** = 5 micron
- **20** = 20 micron
- **0,01** = 0,01 micron
- **CA** = Activated carbon

Bowl

- **TT** = Transparent (Line 042 only)
- **TC** = Short transparent (Line 042 only)
- **PE** = With outer guard

Condensate Drain

- **SS** = Semiautomatic (standard)
- **SA** = Automatic float type
- **SAD** = Automatic differential
- **S18** = Open seat 1/8 F

LINE 042 1/4" | F + L UNITS

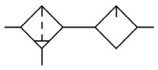

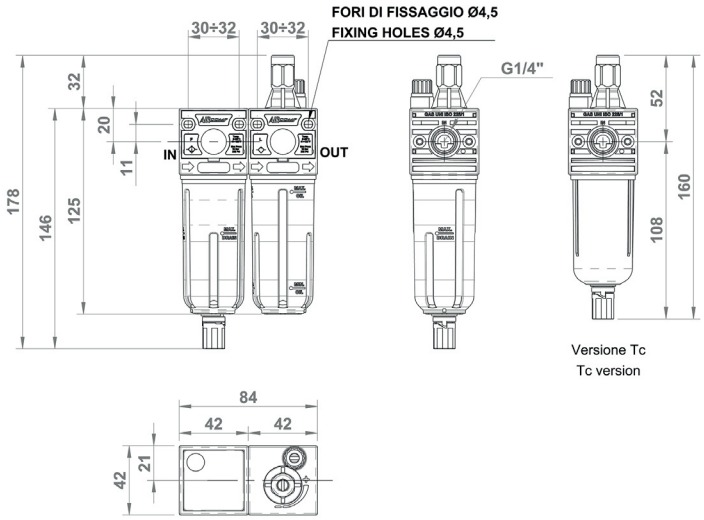

GENERAL FEATURES

Unit consisting of Filter and Lubricator.
It combines the functions of filtration and lubrication of compressed air for industrial applications.
Proportional oil mist lubricator ensuring a constant oil delivery over time.
Bowl made from hardened polyamide available in following configurations:
TT = transparent; PE = outer guard; TC= short transparent.

GENERAL TECHNICAL DATA

Maximum inlet pressure	16 Bar
Drain working pressure	mod. SS: 0,5 – 16 Bar mod. SA: 1,5 – 10 Bar mod. SAD: 2 – 12 Bar
Filtering degree	5 micron; 20 micron
Reference flow rate (P1= 10 bar ΔP= 1 bar)	1.250 Nl/min
Working temperature (a 10 bar)	-5 / +50°C
Max Torque G1/4" IN-OUT	25 Nm
Recommended oil viscosity	ISO VG32
Weight	0,207 kg

Below 3°C the air of the circuit must be free from humidity

ORDERING CODE

CODE	REF.
042.07.*****	F+L 1/4" 042 20 TT SS
042.07.00132	F+L 1/4" 042 20 TC SS
042.07.00500	F+L 1/4" 042 20 TT SS VL
042.07.00072	F+L 1/4" 042 20 PE SS
Float type automatic drain version.	
042.07.00151	F+L 1/4" 042 20 TT SA
042.07.00153	F+L 1/4" 042 20 PE SA
"Differential" automatic drain version.	
042.07.00128	F+L 1/4" 042 20 TT SAD
042.07.00129	F+L 1/4" 042 5 TT SAD
042.07.00130	F+L 1/4" 042 20 PE SAD
042.07.00131	F+L 1/4" 042 5 PE SAD

GUIDE TO REFERENCES

F + L 1/4" 042 20 PE SS

Product
- **F+L** = Filter + Lubricator

Connection
- **1/4"** = G 1/4"
- **3/8"** = G 3/8"
- **1/2"** = G 1/2"
- **3/4"** = G 3/4"
- **1"** = G 1"

Line
- **042**
- **050**
- **052**
- **075**
- **080**
- **095**

Filtering element
- **5** = 5 micron
- **20** = 20 micron

Bowl
- **TT** = Transparent (Line 042 only)
- **TC** = Short transparent (Line 042 only)
- **PE** = With outer guard

Condensate Drain
- **SS** = Semiautomatic (standard)
- **SA** = Automatic float type
- **SAD** = Automatic differential
- **S18** = Open seat 1/8 F

FLUIDTECHNIK bohemia 30 LET

LINE 042 1/4" | SPECIAL VERSIONS

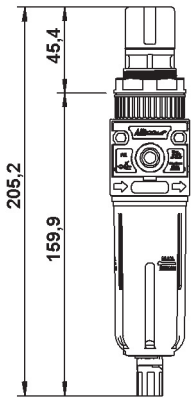

Temper proof version

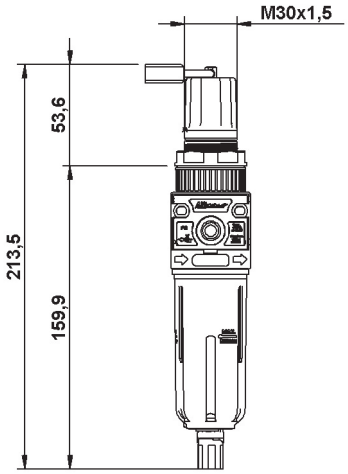

Lockable Version

PRESET FR

* Regulators and Filter regulator Line 042 can be supplied fixed preset at the pressure value required by the customer.
* This version allows purchasing a regulator featuring an outlet pressure preset at a fixed value, equipped with a tamper-proof knob rather than the normal regulation knob.
* The preset pressure value cannot be changed. In order to modify the outlet pressure value, it is necessary to break the tamper-proof knob.
* For further information concerning the tolerances on the outlet pressure, please contact our Sales Dept.

GUIDE TO REFERENCES

FR 1/4" 042 T 10 R PE SS

Product
- **R** = Regulation
- **FR** = Filter Regulator

Special type
- **1/4"** = G1/4"

Line
- **042**

Special type
- **T** = Pre-set version

Taratura
- **10** = 10 bar

Version
- **R** = Relieving (for air)
- **A** = Non relieving (for water)

LOCKABLE FR

* Regulator and Filter regulator Line 042 are available in the version with lock.
* This regulator version allows adjusting the required pressure and fix it, preventing accidental setting changes.
* The regulator is equipped with padlock and two keys.
* For further technical features, please refer to the respective Line or contact our offices.

GUIDE TO REFERENCES

FR 1/4" 042 08 R PE SS LK

Product
- **R** = Regulation
- **FR** = Filter Regulator

Special type
- **1/4"** = G1/4"

Line
- **042**

Pressure range
- **02** = 0-2 Bar
- **04** = 0-4 Bar
- **12** = 0-12 Bar

Version
- **R** = Relieving (for air)
- **A** = Non relieving (for water)

Drain
- **LK** = With lock

FLUIDTECHNIK® bohemia 30 LET