typ: **24DT**

2/2 solenoidový ventil nuceně řízený DN65 - DN100, max. 40 bar

2/2-way solenoid valve
NC - Valve normally closed (as standard)
NO - Valve normally open (as option)

Force-pilot operated piston design valve. No differential pressure is necessary for operation. In standard (NC) the valve closes with spring power.

- **Solenoid valve for extended temperature range**

TECHNICAL SPECIFICATIONS

Type of control	Force-pilot operated
Design	Piston design
Connection	Flanged DN65 - DN100 EN 1092-1 Form B1/B2
Installation	With actuator upright
Pressure	0 - 40 bar (see table on page 2)
Medium	Clean, neutral, gaseous and liquid media
max. viscosity	50 mm²/s
Temperature range	Medium: -40 °C up to +250 °C Ambient: -40 °C up to +50 °C In consideration of the restrictions described on page 4
Body material	Cast steel GP240 GH Stainless steel 1.4581
Metallic inner parts	Stainless steel
Sealing	PEEK
Supply voltage	AC~ 24V, 110V, 230V via external rectifier (included in delivery) DC= 12V, 24V Other supply voltages on request
Voltage tolerance	-10% / +10%
Power consumption	T272 = 60 Watt T352 = 80 Watt T402 = 180 Watt
Protection class	IP65 acc. to DIN 60529
Duty factor	100% ED-VDE 0580
Connection type	Terminal box

VALVE FEATURES

- For media temperatures up to +250 °C
- No pressure difference is required
- High life time
- Simple compact valve design
- High-quality materials
- Reliable and sturdy sealing elements

FUNCTION

NC – non energized closed

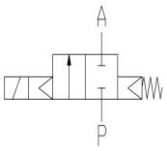

NO – non-energized open

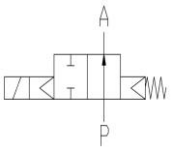

CERTIFICATES

ORDERING SYSTEM

Type					Conn.		Housing		Seal		Coil				Option	
.	2	4	0	9	/	0	5	1	5	/	T	4	0	2	-	D T

Conn.	Housing	Seal	Coil	Option
07 DN65 08 DN80 09 DN100	05 GP240 GH 08 St.steel 1.4581	15 PEEK	T Temperature-design	DT Spacer unit + 250 °C

TECHNICAL FEATURES

				max. pressure for coils		
DN	Seat Ø mm	Kv-value m³/h	Standard type	T272	T352	T402
65	65	75,0	.2407/..15/....-DT	0-25	0-32*	-
80	80	97,0	.2408/..15/....-DT	0-20	0-32*	-
100	100	143,0	.2409/..15/....-DT	-	0-20	0-32*

The flow rate mentioned in the table applies to the strongest coil.
*max. 40 bar with special housing on request

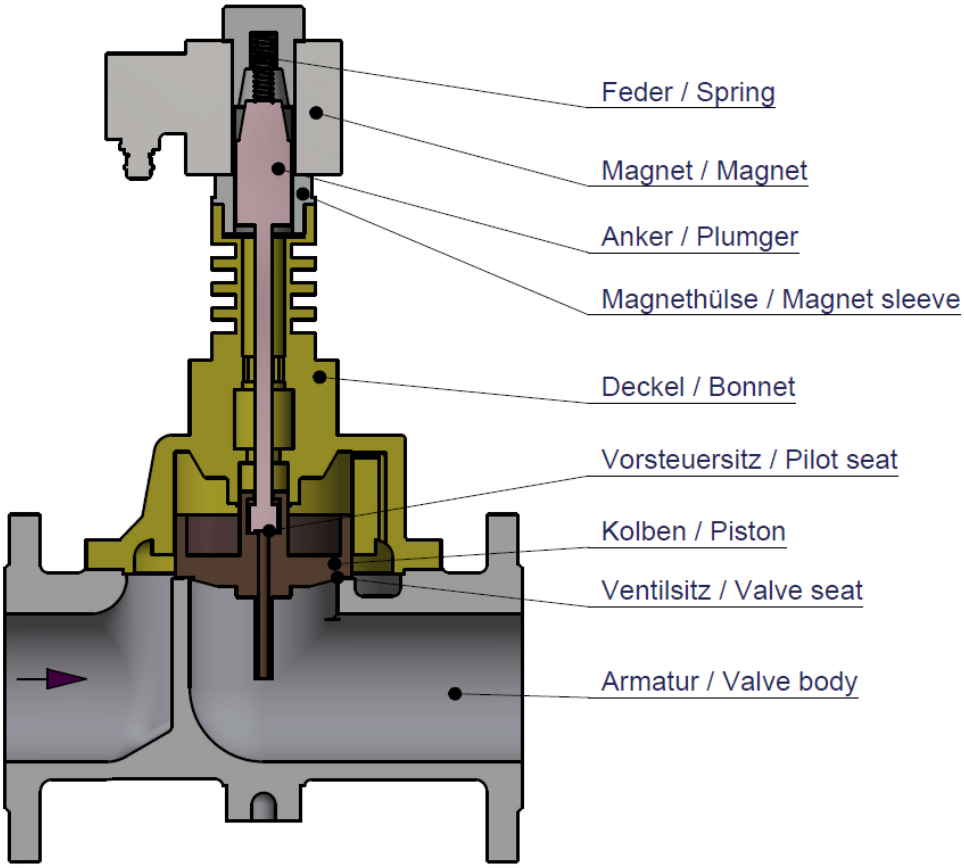

DIMENSIONS

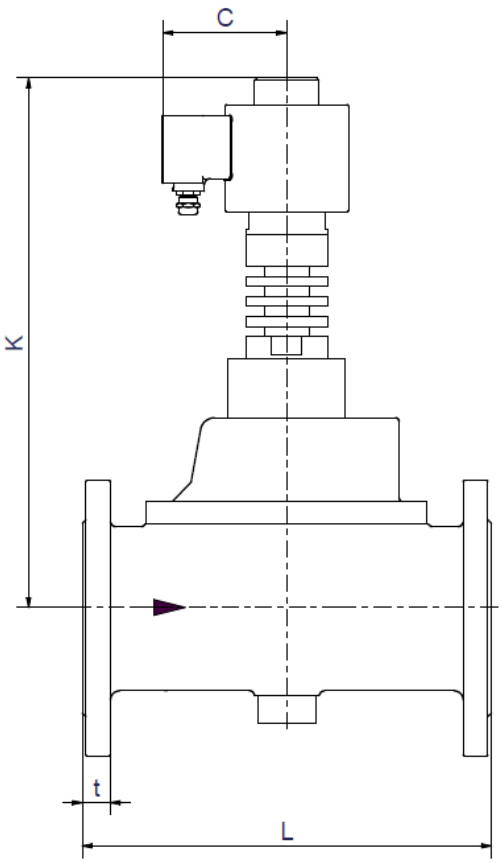

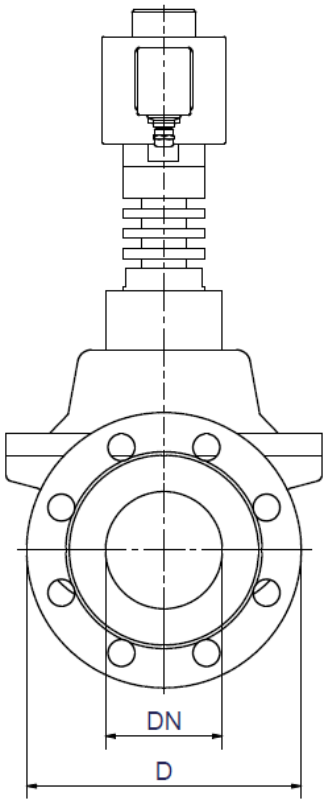

Coil	T272			T352			T402
Type	.2407	.2408	.2409	.2407	.2408	.2409	.2409
DN	65	80	100	65	80	100	100
C	107	107	107	120	120	120	159
D	185	200	235	185	200	235	235
K	400	400	465	495	505	495	on req.
L	290	310	350	290	310	350	350
t	22	24	24	22	24	24	24
kg	32,8	40,7	56,2	44,7	68,5	63,9	on req.

INFORMATION

- It is imperative to observe the installation and safety instructions in our operating and service manuals.
- For information on our GSR ordering code, please refer to our catalogs. If you have any questions, we will be glad to assist you.
- Required ordering information: valve type, function NC/NO, pressure range, connection, nominal width, medium, flow rate, medium and ambient temperatures, connection voltage.
- **Detailed production-specific drawings and other technical information will be made available when an order is placed**

PLEASE NOTE

Each individual application decides which valve type is required, the main factor being the resistance of the materials to the operating medium. The correct selection of materials requires knowledge of the concentration, temperature and degree of contamination of the medium. Other criteria include the operating pressure and max. volumetric flow, since , in addition to high temperatures , high pressures and high flow rates must also be taken into account when selecting the materials.

All materials used for our valves, be it housing, seals or magnets, will be carefully selected in view of the different application areas. Any information given is non-binding and serves for orientation only. No claims under warranty can be derived therefrom.

Heating and power of solenoid coils

The GSR default solenoid valves are designed for continuous operation (100% ED = power-on time) under normal operating conditions. The pulling force of a solenoid coil is basically influenced by three elements:

- The self-heating of the magnetic coil
- The medium temperature
- The ambient temperature

GSR solenoid coils are by default designed for a maximum ambient temperature of +35 °C. This specification applies for the maximum allowable operating pressure specified in the data sheet of the corresponding valve, 100% duty cycle and a medium temperature of +250 °C.

A higher ambient temperature is possible, when lower values are applied for the other influencing parameters. When the max. operation pressure and max. ambient temperature of +50 °C is given the medium temperature is not allowed to be higher than max. +200 °C. In addition to that, deviations from the default design temperature range are possible, e.g. when temperature coils or other constructive measures are used. Please contact the GSR headquarters to discuss the specific application.

More precise specifications and technical data with regard to the operating conditions can be found in the data sheets of the solenoid coils and the solenoid valve regarded. Please observe that the surface temperature of a permanently loaded coil can amount up to +120 °C, solely by the self-heating of the coil. The power consumption of our default solenoid valves was calculated to DIN VDE 05820 for a coil temperature of +20 °C.

- The GSR logo is a registered trademark of GSR Ventiltechnik GmbH & Co. KG.
- Note: All texts and images are the property of GSR Ventiltechnik GmbH & Co. KG and must not be replicated or modified, not even in part, without written approval.
- Original products may differ from the product images shown, due to different materials and the like.
- Subject to error and changes.

Stand: 03.19, MK-MG, Version 1.