LINE 075 1/2 | MODULAR UNITS

GENERAL FEATURES

This Line consists of traditional units and complementary modules for enabling the configuration of battery sets integrated with several functions.
The complementary modules are:
V3 manual shut-off valve, lockable
SV electric or pneumatic shut-off valve
AVP slow-start valve
MF coalescing microfilter 0,01 micron
CF activated carbon filter
PA additional air inlet: intermediate, inlet; outlet

GENERAL TECHNICAL DATA

Fluid	compressed air
Working temperature (a 10 bar):	-5 / +50°C
Connections IN-OUT	G1/2"
Assembling type	Assembling kit
Mounting position	see singol components
Wall fixing	through holes on the body or brackets
Version with lock	standard on V3

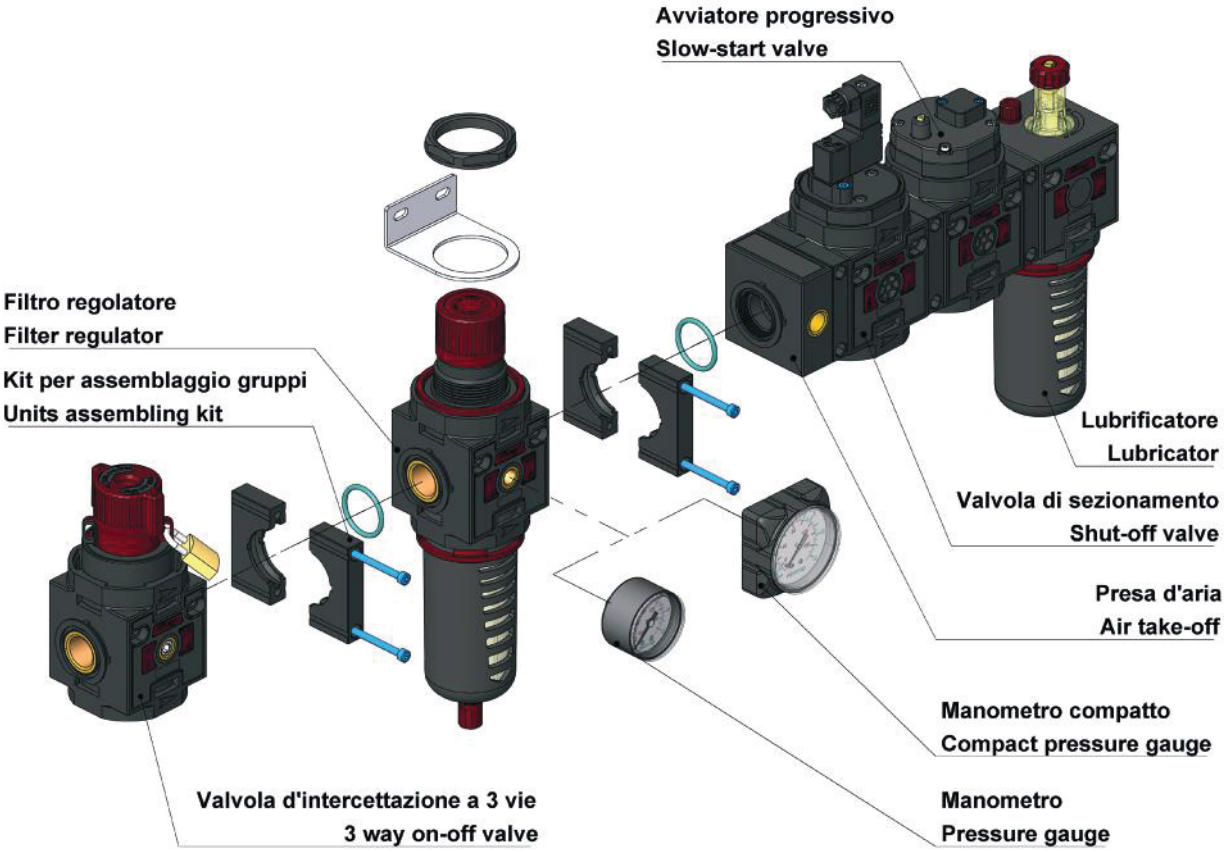

LINE 075 1/2 | MODULAR UNITS

CONDENSATE DRAIN

The condensate building up within the pneumatic systems is oftern causing malfunctioning and expensive extraordinary maintenance. Therefore, it is of utmost importance providing a good separation operated by the filter and an effective drainage to the ouside, in order to avoid an excessive piling up. Aircomp offers the opportunity to equip the filters with different types of condensate drain according to the system requirements.

SEMIAUTOMATIC DRAIN (SS)

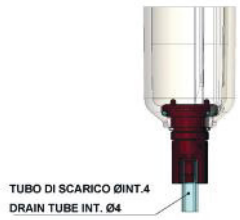

Semiautomatic drain is supplied as standard on all Aircomp Lines.
The standard drain closes when the bowl is pressurized (min. P 0,5 bar) and opens discharging the condensate whenever the unit is depressurized.
The drain can be manually set to always "closed" modality (closed both when the bowl is pressurized and depressurized).

FLOAT TYPE AUTOMATIC DRAIN (SA)

Float type automatic drain opens even when the bowl is pressurized upon reaching a set condensate level. The excess condensate is discharged to the outside and can be conveyed connecting a drainage hose to the duct.

DIFFERENTIAL AUTOMATIC DRAIN (SAD)

Differential automatic drain opens even when the bowl is pressurized but only when there is air consumption (min. delta P = 0,2 bar) and upon reaching a set condensate level. The excess condensate is discharged to the outside. It is possible to connect a drainage hose to the duct.

OPEN 1/8 CONNECTION (S18)

The seat with female thread 1/8 , available upon request, allows the connection to alternative remote open/close systems, such as exhaust solenoid valves. It is available also with locking pin with "manual drain" function.

UNITS WITH COMPACT GAUGE

Units can be requested complete with gauge.

In this case, they are equipped with our compact gauge offering following advantages:
Visibility: The wide dispaly ensures a better visibility.
Compactness: Designed for having reduced dimensions, the Compact Gauge restrains the risk of breaking.
Easiness: Simple mounting without tools.Tightness is guaranteed by an O-RIng, no teflon or sealant are required.
Versatility: The new Compact Gauge can be re-used on other Aircomp units. In case of need, it can be replaced with other commercial gauges.

LINE 075 1/2 | MODULAR UNITS

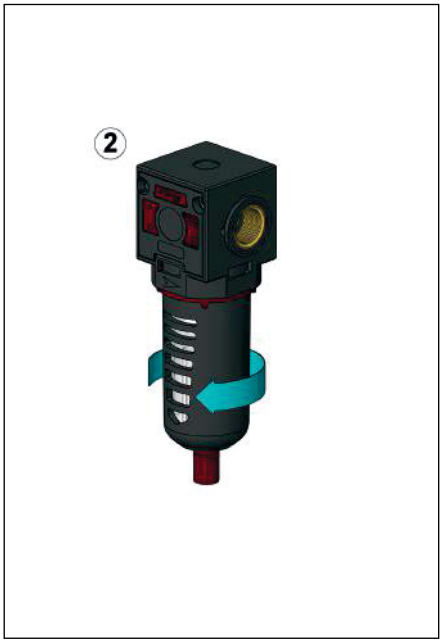

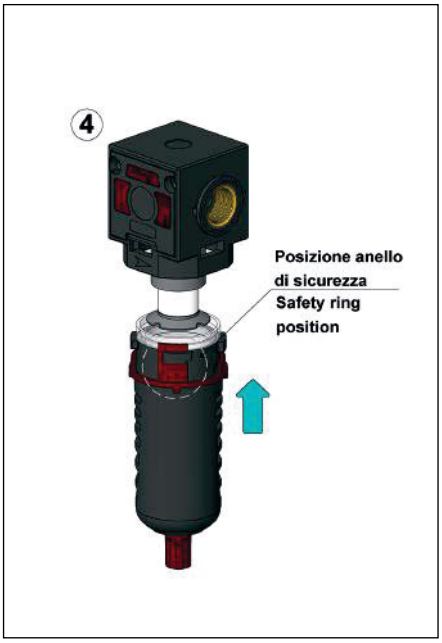

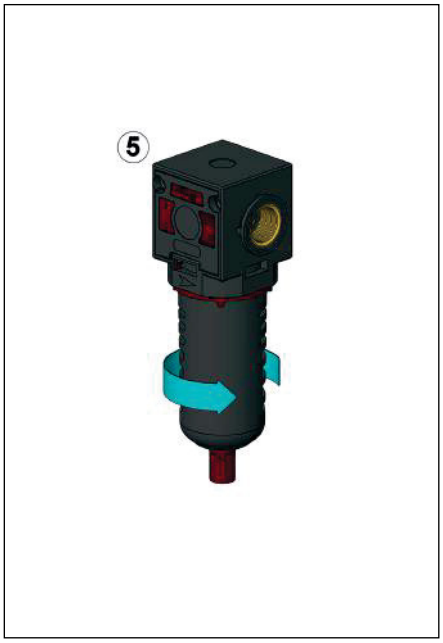

BOWL SAFETY RING

Bowls of Line 050, 052, 075, 080 and 095 are designed for a clip-on mounting, which enables the quick assembling and disassembling.
All the bowl are equipped with a particular safety ring in order to prevent the accidental disassembly when the unit is pressurized.
For disassembling the bowl, it is actually necessary carrying out three movements in a sequence:
1. Lifting the safety ring Pic. 1
2. Turning the bowl clockwise Pic. 2
3. Lowering the bowl Pic. 3

It is not possible to disassemble the bowl when the safety ring is lowered.
Movements 1. and 2., to be executed in a sequence, increase the operator's attention on the intervention he is carrying out.

Attention: the disassembling of the bowl must always be executed when the unit is depressurized.

The bowl reassembling can be easily executed following these steps:
1. Check that the safety ring is in its coorrect position (on the clamping tooth) as in Pic. 4
2. Fit the bowl into the body seat and lock it turning anticlockwise Pic. 5
3. Make sure that the safety ring is brought back to the correct position Pic. 6

LINE 075 1/2 | MODULAR REGULATORS

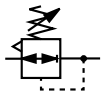

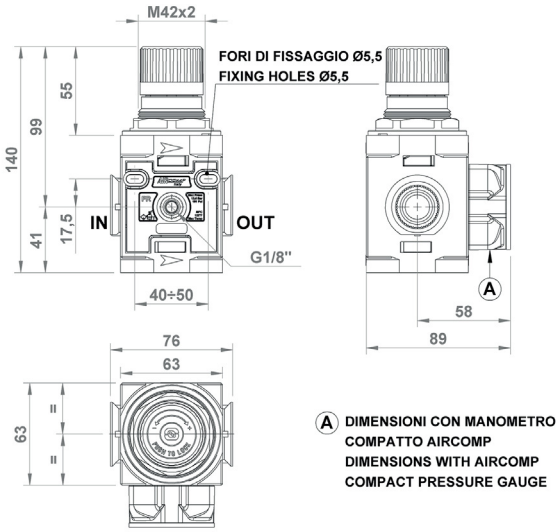

GENERAL FEATURES

Modular regulator with balance valve which ensures big flow rate and low load loss.
Relieving for a quick exhaust of the upstream overpressure.
Knob with pressure locking device.
Equipped with nut and nr. plug.

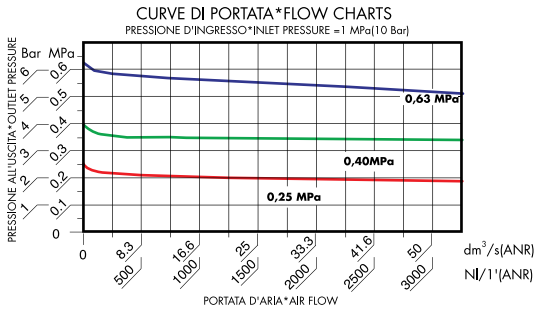

GENERAL TECHNICAL DATA

INLET-OUTLET connections	1/2"
Pressure range	0-4; 0-8; 0-12 Bar
Working pressure	0,5 – 12,5 Bar
Reference flow rate (P1= 6,3 bar P= 1bar)	2.880 Nl/min
Max Torque IN OUT	1/2" 80 Nm
Working temperature (a 10 bar)	-5 / +50°C*
Max Torque IN-OUT	1/2" 80 Nm
Max tourque gauge port	**round:** 10 Nm **compact:** manual
Weight	0,435 kg

Below 3°C the air of the circuit must be free from humidity

ORDERING CODE

CODE	REF.
075.11.00003	R 1/2" 075 04 R
075.11.*****	R 1/2" 075 08 R
075.11.00002	R 1/2" 075 12 R

GUIDE TO REFERENCES

R 1/4" 042 08 R

Product
- **R** = Regulator

Connection
- **1/4"** = G 1/4"
- **3/8"** = G 3/8"
- **1/2"** = G 1/2"
- **3/4"** = G 3/4"
- **1"** = G 1"

Line
- **042**
- **050**
- **052**
- **075**
- **080**
- **095**

Range of pressure
- **04** = 0 - 4 Bar
- **08** = 0 - 8 Bar
- **12** = 0 - 12 Bar

Version
- **R** = Relieving

Version
- = Standard
- **B** = For battery

Special type
- **LK** = Lockable

WOULD YOU LIKE TO ORDER THE REGULATOR COMPLETE WITH GAUGE?

Replace 0 with "M" the the 6th digit of the part nr. for example:

075.11.M0003 R 1/2" 075 04 R + GAUGE

LINE 075 1/2 | MODULAR FILTERS

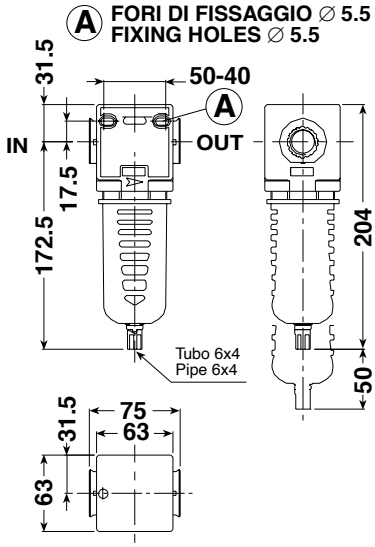

GENERAL FEATURES

Modular filter delivering high degree of condensate separation and low load loss.
It can be wall mounted through the holes prearranged on the body.
Equipped with semiautomatic drain as standard (SS).
Available options: float type automatic drain (SA) and differential drain (SAD) that can convey condensate to to the outside even when the bowl is pressurized. Bowl made from hardened polyamide with outer guard.

GENERAL TECHNICAL DATA

INLET-OUTLET connections	G1/2"
Working pressure	0,5 – 12,5 Bar
Drain working pressure	model SA: 1,5 – 10 Bar model SAD: 2 – 12 Bar
Filtering degree	5 micron; 20 micron
Reference flow rate (P1= 10 bar ΔP= 1 bar)	3.110 Nl/min
Working temperature (a 10 bar)	-5 / +50°C*
Bowl capacity	100 cc
Max Torque IN-OUT	1/2" 80 Nm
Weight	0,355 kg

Below 3°C the air of the circuit must be free from humidity

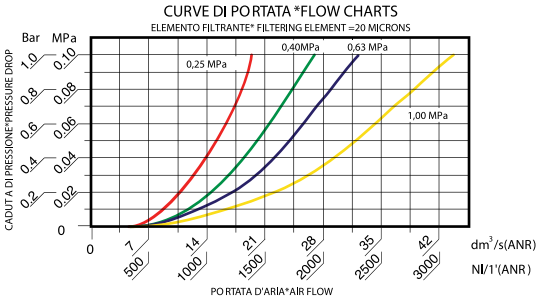

ORDERING CODE

CODE	REF.
075.12.00025	F 1/2" 075 20 PE SS
075.12.00057	F 1/2" 075 5 PE SS
Float type automatic drain version.	
075.12.00026	F 1/2" 075 20 PE SA
075.12.00058	F 1/2" 075 5 PE SA
"Differential" automatic drain version.	
075.12.00076	F 1/2" 075 20 PE SAD
075.12.00077	F 1/2" 075 5 PE SAD

GUIDE TO REFERENCES

F 1/4" 042 20 PE SS

Product
- **F** = Filter
- **MF** = Microfilter
- **CF** = Activated carbon

Connection
- **1/4"** = G 1/4"
- **3/8"** = G 3/8"
- **1/2"** = G 1/2"
- **3/4"** = G 3/4"
- **1"** = G 1"

Line
- **042**
- **050**
- **052**
- **075**
- **080**
- **095**

Filtering element
- **5** = 5 micron
- **20** = 20 micron
- **0,01** = 0,01 micron
- **CA** = Activated carbon

Bowl
- **TT** = Transparent (Line 042 only)
- **TC** = Short transparent (Line 042 only)
- **PE** = With outer guard

Condensate Drain
- **SS** = Semiautomatic (standard)
- **SA** = Automatic float type
- **SAD** = Automatic differential
- **S18** = Open seat 1/8 F

LINE 075 1/2 | COALESCING MICROFILTERS (OIL REMOVER)

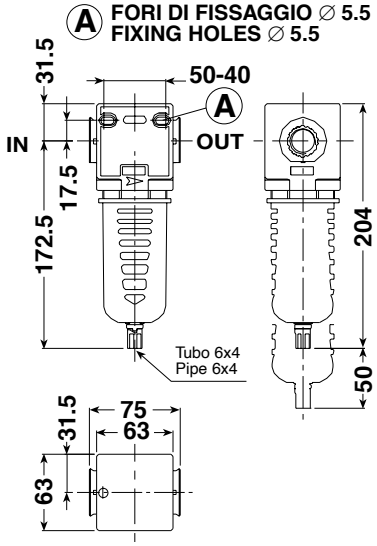

GENERAL FEATURES

Modular filter with coalescing cartridge made from glass boro-silicate fiber providing high filtering efficiency (99,97% on 0,01 micron particles).
It is recommended to install a 5 micron filter upstream in order to allow a longer life of the coalescing cartridge.
Application: it is suitable for removing oil remnants in pneumatic circuits.
It can be wall mounted through the holes prearranged on the body.
Equipped with semiautomatic condensate drain as standard (SS).
Bowl made from hardened polyamide with outer guard.

GENERAL TECHNICAL DATA

INLET-OUTLET connections	1/2"
Working pressure	0,5 – 12,5 Bar
Filtering degree	0,01 micron
Recommended max flow rate (6,3 bar):	800 Nl/min
Working temperature (a 10 bar)	-5 / +50°C*
Max Torque IN OUT	1/2" 80 Nm
Weight	0,355 kg

Below 3°C the air of the circuit must be free from humidity

ORDERING CODE

CODE	REF.
075.12.00027	MF 1/2" 075 0,01 PE SS
Float type automatic drain version.	
075.12.00028	MF 1/2" 075 0,01 PE SA
"Differential" automatic drain version.	
075.12.00078	MF 1/2" 075 0,01 PE SAD

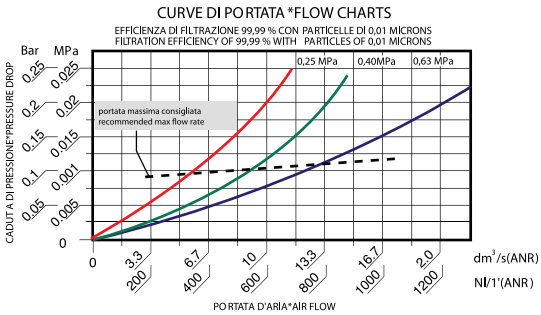

GUIDE TO REFERENCES

F 1/4" 042 20 PE SS

Product

F	=	Filter
MF	=	Microfilter
CF	=	Activated carbon

Connection

1/4"	=	G 1/4"
3/8"	=	G 3/8"
1/2"	=	G 1/2"
3/4"	=	G 3/4"
1"	=	G 1"

Line

042
050
052
075
080
095

Condensate Drain

SS	=	Semiautomatic (standard)
SA	=	Automatic float type
SAD	=	Automatic differential
S18	=	Open seat 1/8 F

Bowl

TT	=	Transparent (Line 042 only)
TC	=	Short transparent (Line 042 only)
PE	=	With outer guard

Filtering element

5	=	5 micron
20	=	20 micron
0,01	=	0,01 micron
CA	=	Activated carbon

COALESCENT CARTRIDGE

FUNCTIONING

The air with impurity enter into the special cartridge with high efficiency, that stop solid particles, capture and join outside particles of oil and condensate (coalescent effect). In this way, they easily fall down at the bottom of the bowl, where condensate is discharged. Filtered air obtained is without solid and liquid parts.

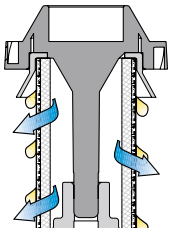

LINE 075 1/2 | CARBON FILTERS

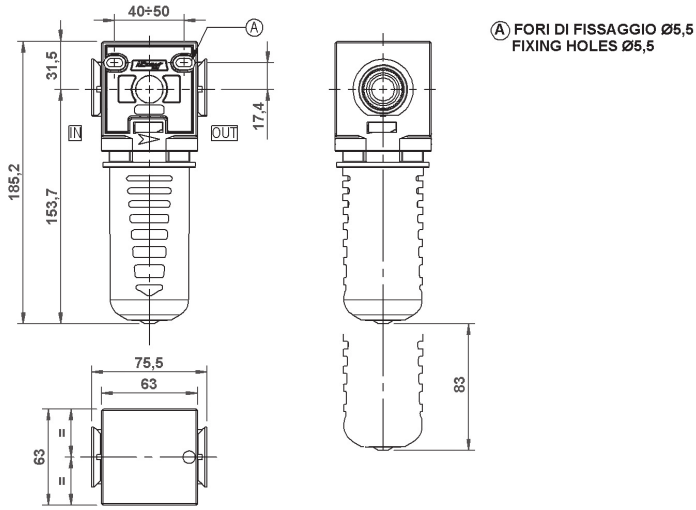

GENERAL FEATURES

Aircomp activated carbon filter exploits the absorbtion properties of activated carbon in order to increase air purity and eliminate unpleasant smell in the air aimed at the industrial sector.
The activated carbon filter, in order to guarantee its performance, needs to be associated with a coalescing filter, that should be preceded by a 5 Micron filter (F+MF+CF).
It can be wall mounted through the holes prearranged on the body.
Closed bowl (without drain) made from hardened polyamide with outer guard.

GENERAL TECHNICAL DATA

Fluid	compressed air
INLET-OUTLET connections	G1/2"
Maximum inlet pressure	12,5 Bar
Filtering cartridge	activated carbon
Life of cartridge	Replacement against pressure drop higher than 0,75 bar. Anyhow, do not exceed 2.000 working hours. Replace the cartridge as recommended, the saturation of the activated carbon may not cause pressure drop.
Reference flow rate	see the flow chart
Working temperature (a 10 bar)	-5 / +50°C*
Max Torque IN-OUT	1/2" 80 Nm
Weight	0,335 kg

Below 3°C the air of the circuit must be free from humidity

CURVE DI PORTATA * FLOW CHARTS

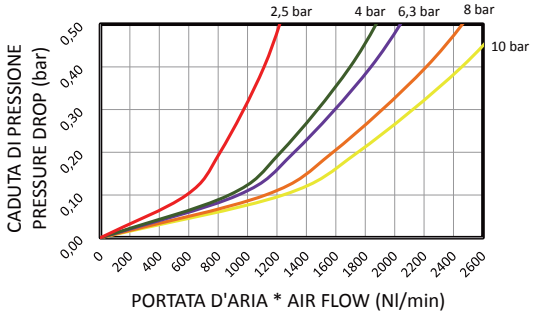

ORDERING CODE

CODE	REF.
075.12.00300	CF 1/2" 075 CA PE

GUIDE TO REFERENCES

F 1/4" 042 20 PE SS

Product
- **F** = Filter
- **MF** = Microfilter
- **CF** = Activated carbon

Connection
- **1/4"** = G 1/4"
- **3/8"** = G 3/8"
- **1/2"** = G 1/2"
- **3/4"** = G 3/4"
- **1"** = G 1"

Line
- **042**
- **050**
- **052**
- **075**
- **080**
- **095**

Filtering element
- **5** = 5 micron
- **20** = 20 micron
- **0,01** = 0,01 micron
- **CA** = Activated carbon

Bowl
- **TT** = Transparent (Line 042 only)
- **TC** = Short transparent (Line 042 only)
- **PE** = With outer guard

Condensate Drain
- **SS** = Semiautomatic (standard)
- **SA** = Automatic float type
- **SAD** = Automatic differential
- **S18** = Open seat 1/8 F

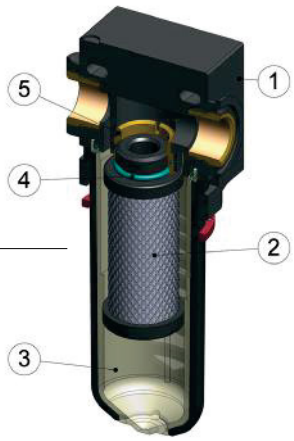

USED MATERIALS

1. **Body** - PA + BRASS
2. **Carbon filter cartridge**
3. **Bowl** - Toughened PA
4. **O-ring** - NBR
5. **Brass insert**

LINE 075 1/2 | LUBRICATORS

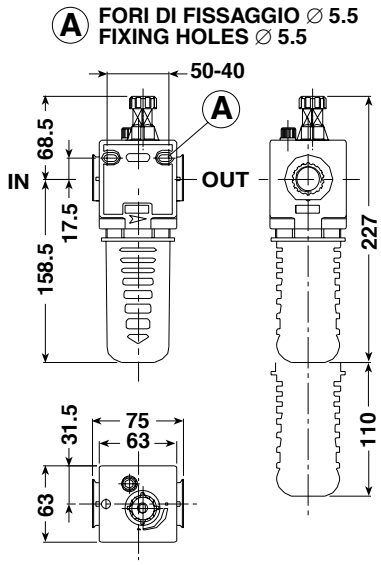

GENERAL FEATURES

Propotional oil mist lubricator allowing a constant oil delivery over time.
Oil suction even under low flow rate with high sensitivity in the lubricant adjustment.
Oil filling plug.
It can be wall mounted through the holes prearranged on the body.
Bowl made from hardened polyamide with outer guard.

GENERAL TECHNICAL DATA

INLET-OUTLET connections	G1/2"
Maximum inlet pressure	12,5 Bar
Bowl capacity	140 cc
Recommended oil viscosity	ISO VG32
Reference flow rate (P1= 10 bar ΔP= 1 bar)	3.550 Nl/min
Working temperature (a 10 bar)	-5 / +50°C C*
Max Torque IN-OUT	1/2" 80 Nm
Weight	0,335 kg

Below 3°C the air of the circuit must be free from humidity

CURVE DI PORTATA *FLOW CHARTS

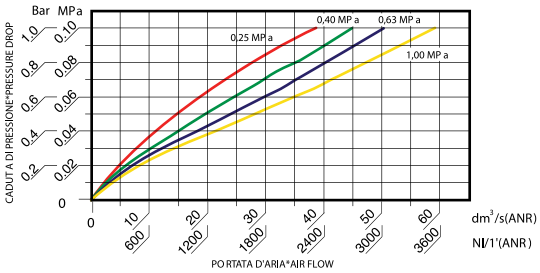

ORDERING CODE

CODE	REF.
075.13.00025	L 1/2" 075 PE

MINIMUM OPERATING FLOW RATE

INLET PRESSURE			MINIMUM AIR FLOW RATE		
Psi	**MPa**	**Bar**	**dm³/s (ANR)**	**Nl/1' (ANR)**	**SCFM**
36	0,25	2,50	0,25	15	0.5
58	0,40	4,00	0,30	18	0.63
91	0,63	6,30	0,38	23	0.8

GUIDE TO REFERENCES

L 1/4" 042 PE

Product
- **L** = Lubricator

Connection
- **1/4"** = G 1/4"
- **3/8"** = G 3/8"
- **1/2"** = G 1/2"
- **3/4"** = G 3/4"
- **1"** = G 1"

Line
- **042**
- **050**
- **052**
- **075**
- **080**
- **095**

Version
- = Standard
- **VL** = Vacuum filling
- **IL** = Min Level indicator
- **IM** = Max/Min Level indicator (Line 095 only)

Bowl
- **TT** = Transparent (Line 042 only)
- **TC** = Short transparent (Line 042 only)
- **PE** = With outer guard

LINE 075 1/2 | LUBRICATOR WITH LEVEL INDICATORS

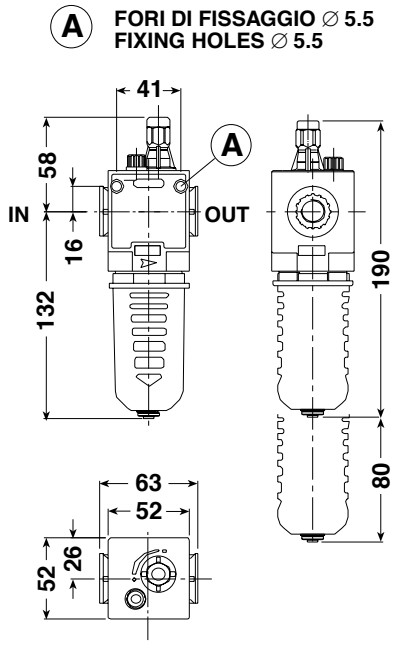

GENERAL FEATURES

Lubricator equipped with float type level indicator, emitting an electric signal able to control light indicators or acoustic alarms upon reaching the minimum level.
Oil suction even under low flow rate with high sensitivity in the lubricant adjustment.
It can be wall mounted through the holes prearranged on the body.
Closed bowl made from hardened polyamide, with outer guard.

GENERAL TECHNICAL DATA

INLET-OUTLET connections	1/2"
Maximum inlet pressure	7 Bar
Maximum voltage	100 V AC
Electric contact	0,75 A 10W Protection IP 65
Bowl capacity	132 cc
Recommended oil viscosity	ISO VG32
Reference flow rate (P1= 6,3 bar ΔP= 1 bar)	3,020 Nl/min
Working temperature (a 7 bar)	-5 / +50°C*
Max Torque IN-OUT	1/2" 80 Nm
Weight	0,385 kg

Below 3°C the air of the circuit must be free from humidity

ORDERING CODE

CODE	REF.
075.13.00032	L 1/2" 075 PE IL

CURVE DI PORTATA *FLOW CHARTS

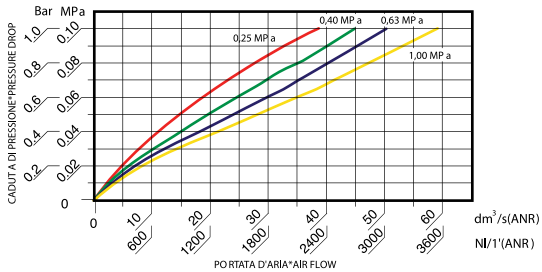

GUIDE TO REFERENCES

L 1/4" 042 PE

Product
- **L** = Lubricator

Connection
- **1/4"** = G 1/4"
- **3/8"** = G 3/8"
- **1/2"** = G 1/2"
- **3/4"** = G 3/4"
- **1"** = G 1"

Line
- **042**
- **050**
- **052**
- **075**
- **080**
- **095**

Version
- = standard
- **VL** = Vacuum filling
- **IL** = Min Level indicator
- **IM** = Max/Min Level indicator (Line 095 only)

Bowl
- **TT** = Transparent (Line 042 only)
- **TC** = Short transparent (Line 042 only)
- **PE** = With outer guard

LEVEL INDICATOR

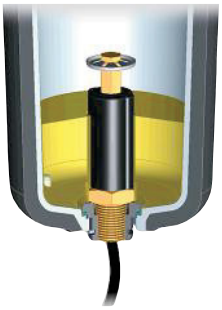

LINE 075 1/2 | VL VACUUM FILLING LUBRICATORS

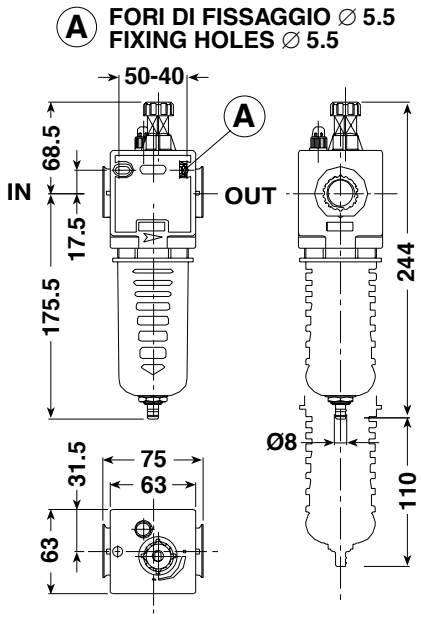

GENERAL FEATURES

Propotional oil mist lubricator with oil filling from an external tank without interrupting the operation of the system.
Oil suction even under low flow rate with high sensitivity in the lubricant adjustment.
It can be wall mounted through the holes prearranged on the body.
Closed bowl made from hardened polyamide with outer guard.

CURVE DI PORTATA *FLOW CHARTS

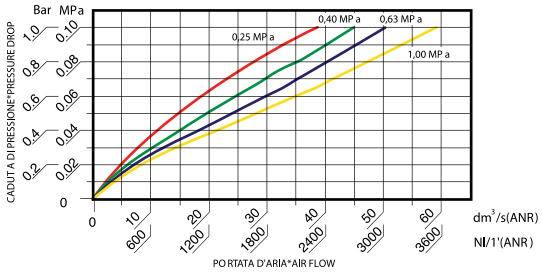

GENERAL TECHNICAL DATA

INLET-OUTLET connections	1/2"
Working pressure	min. 4 Bar – max 12,5 Bar
Bowl capacity	140 cc
Recommended oil viscosity	ISO VG32
Reference flow rate (P1= 10 bar ΔP= 1 bar)	3.550 Nl/min
Working temperature (a 7 bar)	-5 / +50°C*
Max Torque IN-OUT	1/2" 80 Nm
Weight	0,395kg

Below 3°C the air of the circuit must be free from humidity

ORDERING CODE

CODE	REF.
075.13.00500	L 1/2" 075 PE VL

MINIMUM OPERATING FLOW RATE

INLET PRESSURE			MINIMUM AIR FLOW RATE		
Psi	**MPa**	**Bar**	**dm³/s (ANR)**	**Nl/1' (ANR)**	**SCFM**
36	0,25	2,50	0,25	15	0.5
58	0,40	4,00	0,30	18	0.63
91	0,63	6,30	0,38	23	0.8

GUIDE TO REFERENCES

L 1/4" 042 PE

Product
- **L** = Lubricator

Connection
- **1/4"** = G 1/4"
- **3/8"** = G 3/8"
- **1/2"** = G 1/2"
- **3/4"** = G 3/4"
- **1"** = G 1"

Line
- **042**
- **050**
- **052**
- **075**
- **080**
- **095**

Version
- = standard
- **VL** = Vacuum filling
- **IL** = Min Level indicator
- **IM** = Max/Min Level indicator (Line 095 only)

Bowl
- **TT** = Transparent (Line 042 only)
- **TC** = Short transparent (Line 042 only)
- **PE** = With outer guard

FUNCTIONING VL

The oil filling is achieved by pressing and holding the button at the base of the lubricator body.
The "Venturi" system causes a vacuum inside the bowl and the related oil intake.
The oil fillling is stopped only upon releasing the button.
The oil level is visually checked during the filling.
Max. suction height : 1,5 m.

LINE 075 1/2 | FILTER REGULATORS

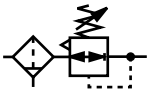

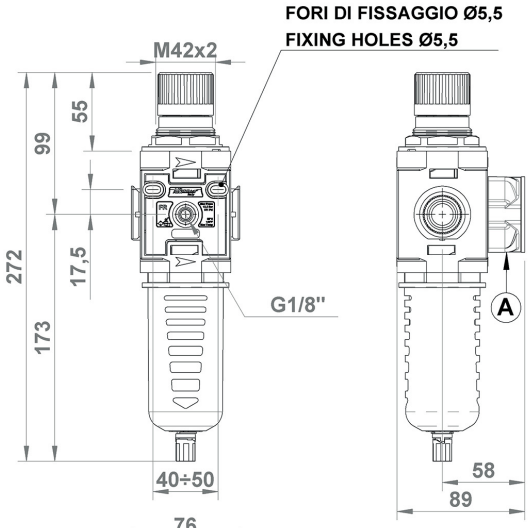

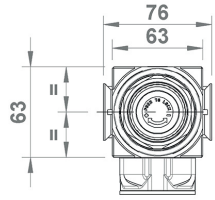

A DIMENSIONI CON MANOMETRO COMPATTO AIRCOMP
DIMENSIONS WITH AIRCOMP COMPACT PRESSURE GAUGE

GENERAL FEATURES

High performance modular filter regulator ensuiriung big flow rate and low load loss.
Relieving for a quick exhaust of the downstream overpressure.
Knob with locking pressure device.
Equipped with semiautomatic drain as standard (SS).
Available options: float type automatic drain (SA) and differential drain (SAD) that can convey condensate to to the outside even when the bowl is pressurized.
Bowl made from hardened polyamide with outer guard.

GENERAL TECHNICAL DATA

INLET-OUTLET connections	G1/2"
Pressure range	0-4; 0-8; 0-12 Bar
Working pressure	0,5 – 12,5 Bar
Working pressure with automatic drain	model SA: 1,5 – 10 Bar model SAD: 2 – 12 Bar
Filtering degree	5 micron; 20 micron
Reference flow rate (P1= 6,3 bar ΔP= 1 bar)	2.880 Nl/min
Working temperature (a 7 bar)	-5 / +50°C*
Max Torque IN-OUT	1/2" 80 Nm
Max tourque gauge port	**round:** 10 Nm **compact:** manual
Bowl capacity	100 cc
Weight	0,565 kg

Below 3°C the air of the circuit must be free from humidity

CURVE DI PORTATA*FLOW CHARTS

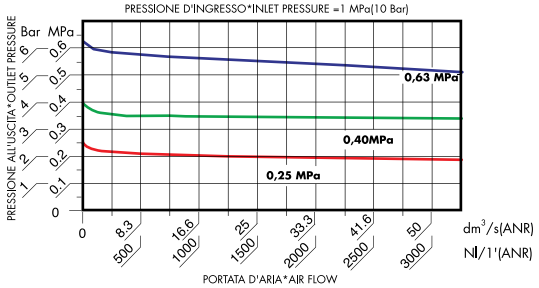

ORDERING CODE

CODE	REF.
075.14.00025	FR 1/2" 075 20 08 R PE SS
075.14.00053	FR 1/2" 075 20 12 R PE SS
075.14.00062	FR 1/2" 075 5 04 R PE SS
075.14.00063	FR 1/2" 075 5 08 R PE SS
075.14.00064	FR 1/2" 075 5 12 R PE SS
Float type automatic drain version.	
075.14.00026	FR 1/2" 075 20 08 R PE SA
075.14.00065	FR 1/2" 075 20 12 R PE SA
"Differential" automatic drain version.	
075.14.00097	FR 1/2" 075 20 08 R PE SAD
075.14.00098	FR 1/2" 075 20 12 R PE SAD

GUIDE TO REFERENCES

FR 1/4" 042 20 08 R PE SS

Product
- **FR** = Filter regulator

Connection
- **1/4"** = G 1/4"
- **3/8"** = G 3/8"
- **1/2"** = G 1/2"
- **3/4"** = G 3/4"
- **1"** = G 1"

Line
- **042**
- **050**
- **052**
- **075**
- **080**
- **095**

Filtering element
- **5** = 5 micron
- **20** = 20 micron

Condensate Drain
- **SS** = Semiautomatic (standard)
- **SA** = Automatic float type
- **SAD** = Automatic differential
- **S18** = Open seat 1/8 F

Bowl
- **TT** = Transparent (Line 042 only)
- **TC** = Short transparent (Line 042 only)
- **PE** = With outer guard

Version
- **R** = Relieving

Range of pressure
- **04** = 0 - 4 Bar
- **08** = 0 - 8 Bar
- **12** = 0 - 12 Bar

WOULD YOU LIKE TO ORDER THE REGULATOR COMPLETE WITH GAUGE?

Replace 0 with "M" the the 6th digit of the part nr. for example:

075.14.M0025 FR1/2" 075 20 08R PESS + GAUGE

LINE 075 1/2 | 3-WAY VALVES WITH LOCK

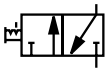

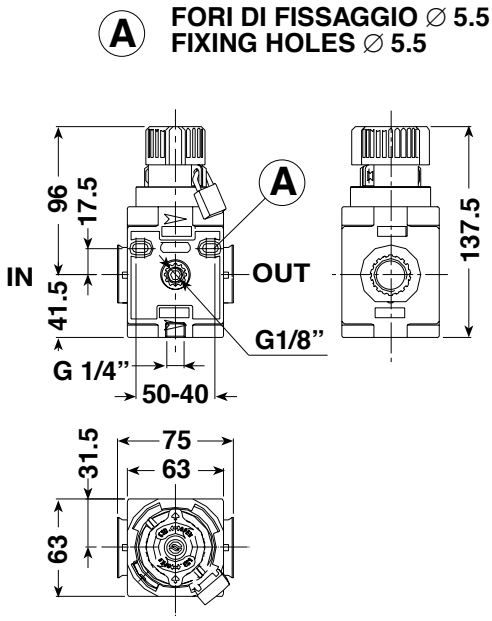

GENERAL FEATURES

The job of this 3-way on-off valve is to shut off air supply and exhaust the pressure in the downstream circuit.
Application: it can be used singularly or, more commonly, assembled in battery set. It is actuated for carrying out maintenance operations with total safety, thus avoiding the system from being accidentally pressurized.
The valve is equipped with nr. 1 lock and nr. 2 keys.

GENERAL TECHNICAL DATA

INLET-OUTLET connections	1/2"
Exhaust connection	1/4"G
Maximum inlet pressure	12,5 Bar
Reference flow rate (P1= 10 bar ΔP= 1 bar)	3.075 Nl/min
Exhaust flow rate (at 10 bar in open air)	1.000 Nl/min
Working temperature (a 10 bar)	-5 / +50°C*
Max Torque IN-OUT	1/2" 80 Nm
Weight	0,390 kg

Below 3°C the air of the circuit must be free from humidity

CURVE DI PORTATA *FLOW CHARTS

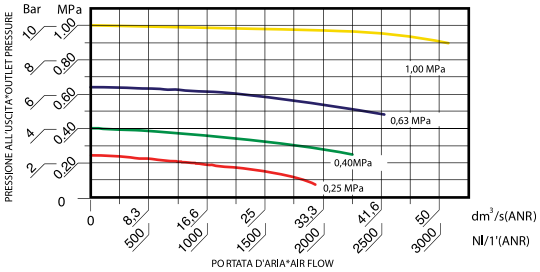

ORDERING CODE

CODE	REF.
075.25.00001	V 1/2" 075 V 3

GUIDE TO REFERENCES

V 1/4" 042 3V

Product
- **V** = 3 way Valve

Connection
- **1/4"** = G 1/4"
- **3/8"** = G 3/8"
- **1/2"** = G 1/2"
- **3/4"** = G 3/4"

Line
- **042**
- **050**
- **052**
- **075**
- **080**

Functioning
- **3V** = 3 Way

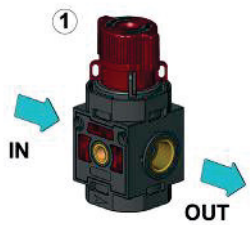

1. with OPEN VALVE

IN and OUT are in communication for an open air flow

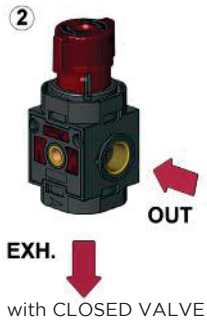

2. with CLOSED VALVE

The inlet (IN) is closed while the outlet (OUT) is in communication with the exhaust.

LINE 075 1/2 | ELECTRICAL SHUT-OFF VALVES 15MM

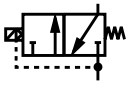

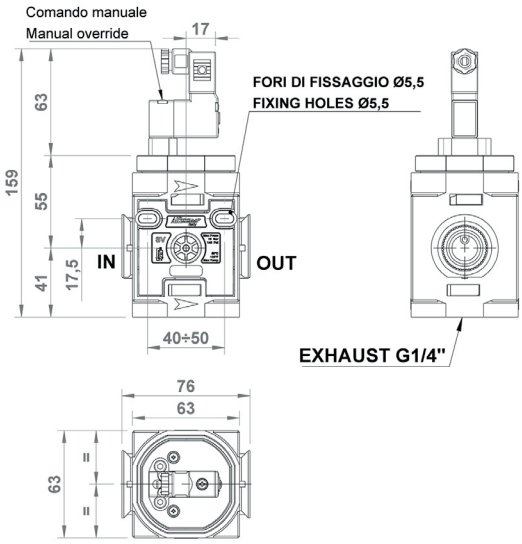

GENERAL FEATURES

The job of the shut-off valve is to close the air supply and exhaust the pressure in the downstream circuit.
The electrical model is often connected to ON-OFF switches or emergency mushrooms on the control consolle.
Application: it can be used singularly or, more commonly, assembled in battery set. It is actuated for carrying out maintenance operations or for depressurizing circuits in any emergency situation.

GENERAL TECHNICAL DATA

INLET-OUTLET connections	1/2"
Exhaust connection	1/4"G
Maximum inlet pressure	10 Bar
Minimum working pressure	3 Bar
Reference flow rate (P1= 10 bar P= 1 Bar)	3.075 Nl/min
Exhaust flow rate (at 10 bar in open air)	1.000 Nl/min
Working temperature (a 10 bar)	-5 / +50°C*
Max Torque IN-OUT	1/2" 80 Nm
Electric pilot	3/2 NC 15 mm (Microsol type)
Available voltage	24VDC (3W); 24VAC; 110VAC; 220VAC (5VA)
Weight	0,450kg

Below 3°C the air of the circuit must be free from humidity

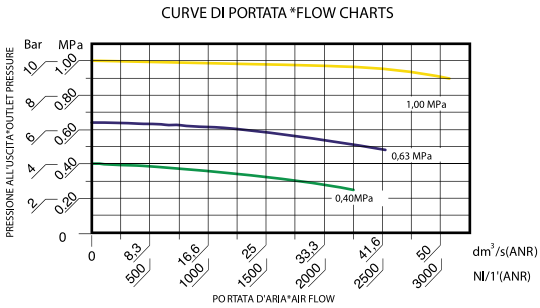

GUIDE TO REFERENCES

SV 1/4" 042 15MM 24VDC

Product
- **SV** = Shut-off valve

Connection
- **1/4"** = G 1/4"
- **3/8"** = G 3/8"
- **1/2"** = G 1/2"
- **3/4"** = G 3/4"

Line
- **042**
- **050**
- **052**
- **075**
- **080**

Voltage
- **12 VDC**
- **24 VDC**
- **24 VAC**
- **110 VAC**
- **220 AC**

Version
- **15MM** = Solenoid pilot 15 mm
- **CNOM** = Electric controlC-NOMO
- **PNEU** = Pneumatic

ORDERING PART NR. COMPLETE UNIT

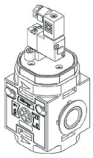

CODE	REF.
075.26.00102	SV 1/2 075 15MM 12V DC
075.26.00202	SV 1/2 075 15MM 24V DC
075.26.00602	SV 1/2 075 15MM 24V AC
075.26.00702	SV 1/2 075 15MM 110V AC
075.26.00802	SV 1/2 075 15MM 220V AC

ORDERING PART NR. SEPARATE COMPONENTS

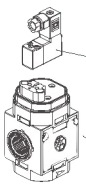

CODE	REF.
C50.26.00002	KIT C. ELECTR. 3/2 NC 2,5W 24V DC MICROSOL
C50.26.00003	KIT C. ELECTR. 3/2 NC 3VA 24V AC MICROSOL
C50.26.00004	KIT C. ELECTR. 3/2 NC 3VA 110V AC MICROSOL
C50.26.00005	KIT C. ELECTR. 3/2 NC 3VA 220V AC MICROSOL
075.26.00002	SV 1/2" 075 PRED. C. ELECTR. MICROSOL/PNEUM

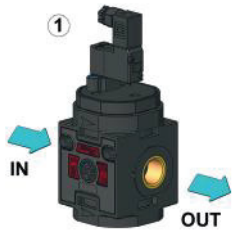

1. with actuated pilot, the SV is open (IN-OUT communication)

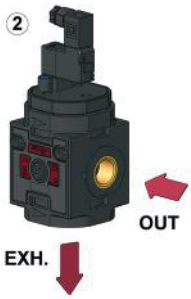

2. with non-actuated pilot, the SV is closed (IN closed / OUT exhausting)

LINE 075 1/2 | ELECTRICAL SHUT-OFF VALVES CNOMO

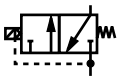

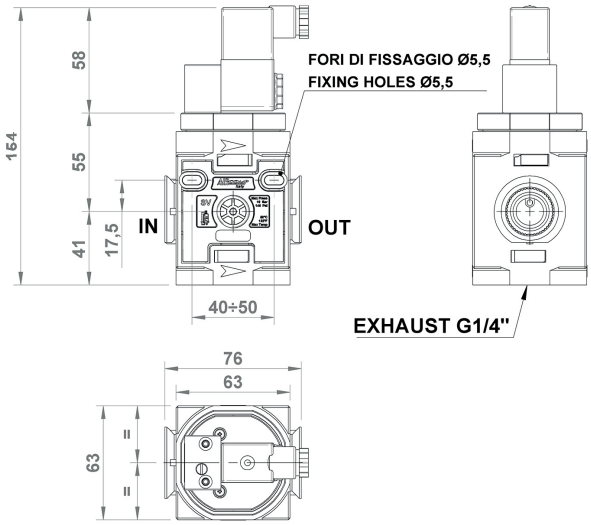

GENERAL FEATURES

The job of the shut-off valve is to close the air supply and exhaust the pressure in the downstream circuit.
The electrical model is often connected to ON-OFF switches or emergency mushrooms on the control consolle.
Application: it can be used singularly or, more commonly, assembled in battery set. It is actuated for carrying out maintenance operations or for depressurizing circuits in any emergency situation.

GENERAL TECHNICAL DATA

INLET-OUTLET connections	1/2"
Exhaust connection	1/4"G
Maximum inlet pressure	10 Bar
Minimum working pressure	3 Bar
Reference flow rate (P1= 10 bar P= 1 Bar)	3.075 Nl/min
Exhaust flow rate (at 10 bar in open air)	1.000 Nl/min
Working temperature (a 10 bar)	-5 / +50°C*
Max Torque IN-OUT	1/2" 80 Nm
Electric pilot	3/2 NC (tipo CNOMO) for coil 22mm
Available voltage	24VDC (3W); 24VAC; 110VAC; 220VAC (5VA)
Weight	0,520kg

Below 3°C the air of the circuit must be free from humidity

CURVE DI PORTATA *FLOW CHARTS

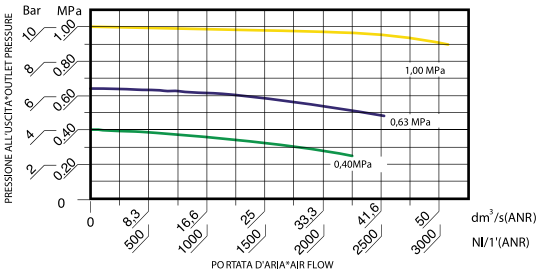

GUIDE TO REFERENCES

SV 1/4" 042 15MM 24VDC

Product
- **SV** = Shut-off valve

Connection
- **1/4"** = G 1/4"
- **3/8"** = G 3/8"
- **1/2"** = G 1/2"
- **3/4"** = G 3/4"

Line
- **042**
- **050**
- **052**
- **075**
- **080**

Voltage
- **12 VDC**
- **24 VDC**
- **24 VAC**
- **110 VAC**
- **220 AC**

Version
- **15MM** = Solenoid pilot 15 mm
- **CNOM** = Electric controlC-NOMO
- **PNEUAMTIC** = Pneumatic connection

ORDERING PART NR. COMPLETE UNIT

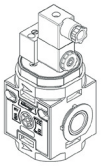

CODE	REF.
075.26.00101	SV 1/2 075 CNOM 12V DC
075.26.00201	SV 1/2 075 CNOM 24V DC
075.26.00601	SV 1/2 075 CNOM 24V AC
075.26.00701	SV 1/2 075 CNOM 110V AC
075.26.00801	SV 1/2 075 CNOM 220V AC

ORDERING PART NR. SEPARATE COMPONENTS

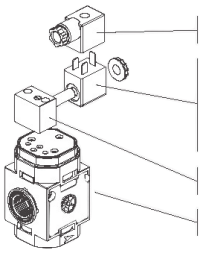

CODE	REF.
A50.26.00010	CONN. CNOMO
A50.26.00006	SOL. 3W 24V
A50.26.00007	SOL. 5VA 24V DC
A50.26.00008	SOL. 5VA 110V AC
A50.26.00009	SOL. 5VA 220V AC
A50.26.00006	C.ELECTR EV 3/2 NC CNOMO
075.26.00001	SV 1/2" 075 PRED. C. ELECTR. CNOMO

1. with actuated pilot, the SV is open (IN-OUT communication)

2. with non-actuated pilot, the SV is closed (IN closed / OUT exhausting)

LINE 075 1/2 | PNEUMATIC SHUT-OFF VALVES

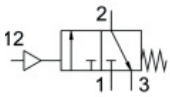

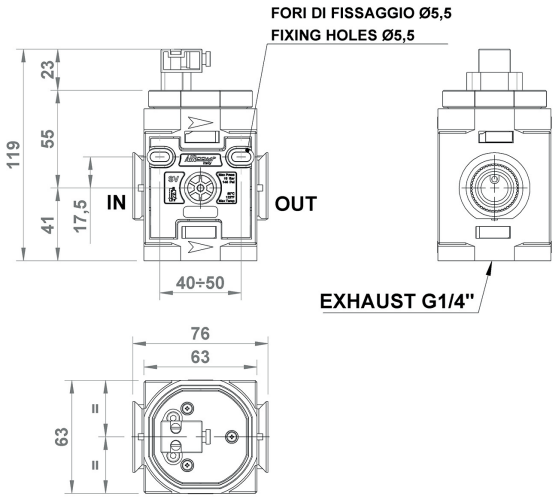

GENERAL FEATURES

The job of the shut-off valve is to close the air supply and exhaust the pressure in the downstream circuit.
The pneumatic model is actauted through a pneumatic piloting operated by selectors or by mushroom actuators present on the control consolle.
Application: it can be used singularly or, more commnly, assembled in battery set. It is actuated for carrying out maintenance operations or for depressurizing the circuit in any emergency situation.

GENERAL TECHNICAL DATA

INLET-OUTLET connections	1/2"
Exhaust connection	1/4"G
Maximum inlet pressure	10 Bar
Minimum working pressure	3 Bar
Reference flow rate (P1= 10 bar P= 1 Bar)	3.075 Nl/min
Exhaust flow rate (at 10 bar in open air)	1.000 Nl/min
Working temperature (a 10 bar)	-5 / +50°C*
Max Torque IN-OUT	1/2" 80 Nm
Pneumatic connection	push-in fitting D. 4mm
Weight	0,400kg

Below 3°C the air of the circuit must be free from humidity

CURVE DI PORTATA *FLOW CHARTS

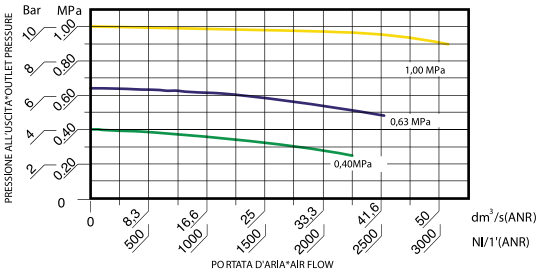

GUIDE TO REFERENCES

SV 1/4" 042 15MM 24VDC

Product
- **SV** = Shut-off valve

Connection
- **1/4"** = G 1/4"
- **3/8"** = G 3/8"
- **1/2"** = G 1/2"
- **3/4"** = G 3/4"

Line
- **042**
- **050**
- **052**
- **075**
- **080**

Voltage
- **12 VDC**
- **24 VDC**
- **24 VAC**
- **110 VAC**
- **220 AC**

Version
- **15MM** = Solenoid pilot 15 mm
- **CNOM** = Electric controlC-NOMO
- **PNEU** = Pneumatic

ORDERING CODE

ORDERING PART NR. COMPLETE UNIT

CODE	REF.
075.26.00902	SV 1/2 075 PNEUMATIC

ORDERING PART NR. SEPARATE COMPONENTS

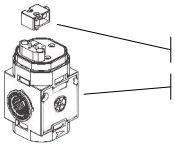

CODE	REF.
C40.26.00014	PNEUMATIC CONTROL KIT
075.26.00002	SV 1/2" 075 PRED. C. ELECTR. MICROSOL/PNEUM

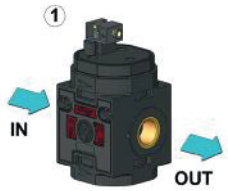

1. with piloting under pressure, the SV is open (IN-OUT communication)

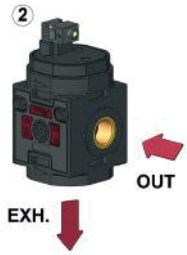

2, with piloting not under pressure, the SV is closed (IN closed / OUT exhausting)

LINE 075 1/2" | SLOW-START VALVES

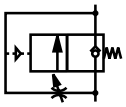

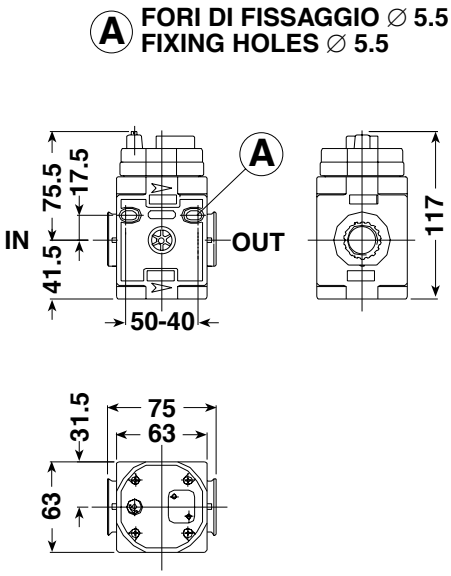

GENERAL FEATURES

The job of the slow-start valve is to gradually pressurize the pneumatic system upon switching it on.
The gradual pressurization takes place until about 60% of the supply pressure is reached.
The pressurization time can be adjusted through the speed controller positioned in the upper part of the body.
Application: it can be singularly used, or, more commonly, assembled with the shut-off valve. The AVP avoids any dangerous pressure surge, that may be caused by quickly supplying the system to the working pressure.

GENERAL TECHNICAL DATA

INLET-OUTLET connections	G1/2"
Working pressure	min. 3 Bar - max 10 Bar
Reference flow rate (P1= 10 bar ΔP= 1 bar)	3.075 Nl/min
Working temperature (a 10 bar)	-5 / +50°C*
Max Torque IN-OUT	1/2" 80 Nm
Weight	0,410 kg

Below 3°C the air of the circuit must be free from humidity

ORDERING CODE

CODE	REF.
075.27.00001	AVP 1/2" 075 PN Autonom.

CURVE DI PORTATA *FLOW CHARTS

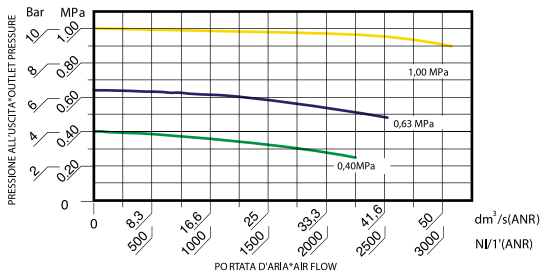

GUIDE TO REFERENCES

AVP 1/4" 042 PN

Product
AVP = Slow-start valve

Connection
1/4" = G 1/4"
3/8" = G 3/8"
1/2" = G 1/2"
3/4" = G 3/4"

Line
042
050
052
075
080

Functioning
PN = Pneumatic

LINE 075 1/2 | SHUT-OFF/SLOW START COMBINATIONS

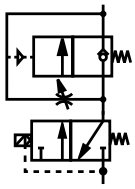

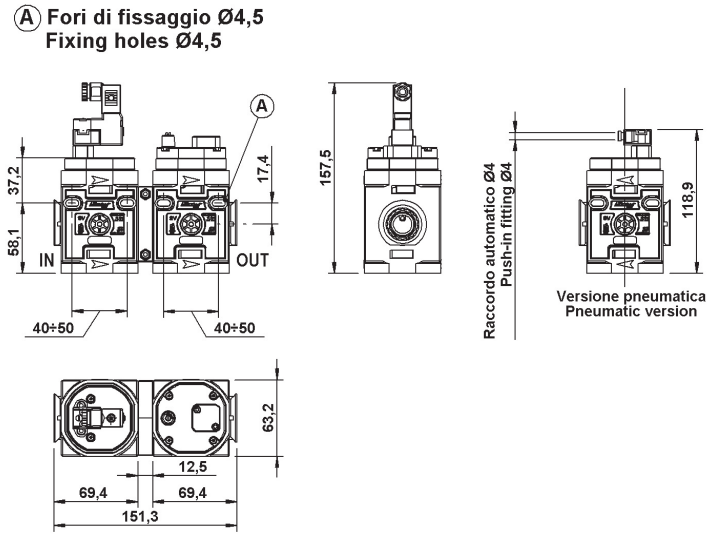

GENERAL FEATURES

SVAV is a set consisting of shut-off valve (SV) and slow-start valve (AVP), assembled and equipped with electric or pneumatic control.
This complete unit, combines the functions of exhausting the pneumatic circuit and cutting-off air supply (SV) with the progressiva pressurization provided by the slow-start valve (AVP).
The valves are available with electric control in different voltages or with pneumatic control.
The proposed set is ready to be subsequently assembled with other Aircomp modules, or singularly mounted.
For further information about SV and AVP, please refer to the respective datasheets.

GENERAL TECHNICAL DATA

INLET-OUTLET connections	1/2"
Exhaust connection.	1/4"
Working pressure	min. 3 Bar – max. 10 Bar
Reference flow rate (P1= 10 bar ΔP= 1 bar)	3.075 Nl/min
Exhaust flow rate (at 10 bar in open air)	1.000 Nl/min
Working temperature (a 10 bar)	-5 / +50°C*
Max Torque IN-OUT	1/2" 80 Nm
Electric pilot	3/2 NC 15 mm (Microsol type)
Available voltage:	24VDC (2,5W); 24VAC; 110VAC; 220VAC (3VA)
Pneumatic piloting	push-in fitting D. 4mm
SVAV E Weight:	0,885 kg
SVAV P Weight	0,860 kg

Below 3°C the air of the circuit must be free from humidity

GUIDE TO REFERENCES

SVAV 1/2" 075 E 24VDC

Product
SVAV = SV+AVP

Connection
1/2" = G 1/2"

Line
075

Piloting
E = Elettrico
P = Pneumatic

Voltage
24VDC
24VAC
110VAC
220VAC

ORDERING PART NR.ELECTRIC VERSION

CODE	REF.
075.28.00001	SVAV 1/2 075 E 24 VDC
075.28.00002	SVAV 1/2 075 E 24 VAC
075.28.00003	SVAV 1/2 075 E 110 VAC
075.28.00004	SVAV 1/2 075 E 220 VAC

ORDERING PART NR. PNEUMATIC VERSION

CODE	REF.
075.28.00005	SVAV 1/2 042 P Ø4

LINE 075 1/2 | FR + L UNITS

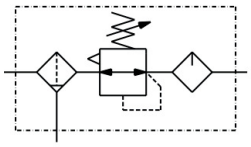

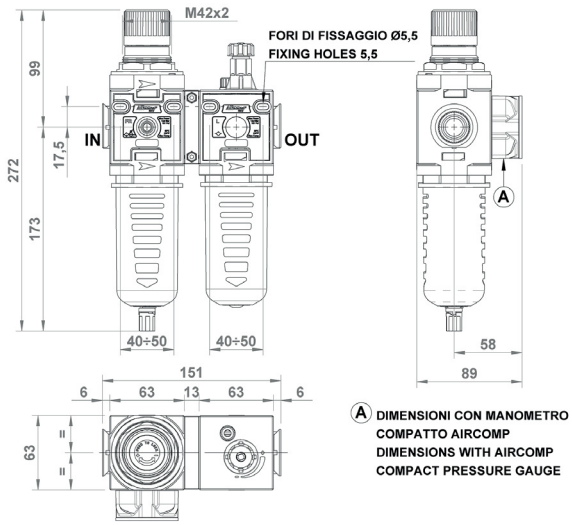

GENERAL FEATURES

Unit consisting of Filter regulator and Lubricator.
It combines the functions of filtering, pressure regulation and lubrication of compressed air for industrial application.
Unit featuring big flow rate and regualtion sensitivity, filtration and high condensate separation.
Semiautomatic condensate drain supplied as standard (SS).
Available options: float type automatic drain (SA) and differential drain (SAD) that can convey condensate to to the outside even when the bowl is pressurized.
Bowl made from hardened polyamide with outer guard.

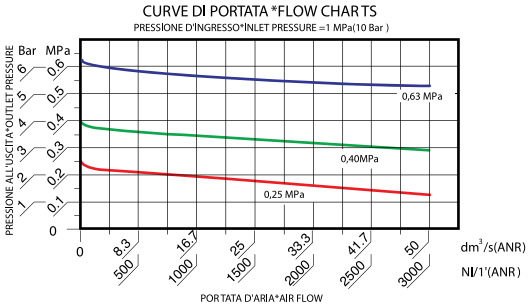

GENERAL TECHNICAL DATA

INLET-OUTLET connections	G1/2"
Pressure range	0-4; 0-8; 0-12 Bar
Working pressure	0,5 – 12,5 Bar
Working pressure with automatic drain	model SA: 1,5 – 10 Bar model SAD: 2 – 12 Bar
Filtering degree	5 micron; 20 micron
Reference flow rate (P1= 6,3 bar ΔP= 1 bar)	2.200 Nl/min
Working temperature (a 10 bar)	-5 / +50°C*
Max Torque IN-OUT	1/2" 80 Nm
Max tourque gauge port	**round:** 10 Nm **compact:** manual
Weight	0,94 kg

Below 3°C the air of the circuit must be free from humidity

ORDERING CODE

CODE	REF.
075.16.00025	FR+L 1/2" 075 20 08 R PE SS
075.16.00053	FR+L 1/2" 075 20 12 R PE SS
075.16.00065	FR+L 1/2" 075 5 08 R PE SS
075.16.00066	FR+L 1/2" 075 5 12 R PE SS
075.16.00501	FR+L 1/2" 075 20 08 R PE SS VL
Float type automatic drain version.	
075.16.00026	FR+L 1/2" 075 20 08 R PE SA
075.16.00068	FR+L 1/2" 075 20 12 R PE SA
"Differential" automatic drain version.	
075.16.00096	FR+L 1/2" 075 20 08 R PE SAD
075.16.00097	FR+L 1/2" 075 20 12 R PE SAD

GUIDE TO REFERENCES

FR+L 1/4" 042 20 08 R PE SS

Product
- **FR+L** = Filter regulator + Lubricator

Connection
- **1/4"** = G 1/4"
- **3/8"** = G 3/8"
- **1/2"** = G 1/2"
- **3/4"** = G 3/4"
- **1"** = G 1"

Line
- **042**
- **050**
- **052**
- **075**
- **080**
- **095**

Filtering element
- **5** = 5 micron
- **20** = 20 micron

Range of pressure
- **04** = 0 - 4 Bar
- **08** = 0 - 8 Bar
- **12** = 0 - 12 Bar

Version
- **R** = Relieving

Bowl
- **TT** = Transparent (Line 042 only)
- **TC** = Short transparent (Line 042 only)
- **PE** = With outer guard

Condensate Drain
- **SS** = Semiautomatic (standard)
- **SA** = Automatic float type
- **SAD** = Automatic differential
- **S18** = Open seat 1/8 F

WOULD YOU LIKE TO ORDER
THE REGULATOR COMPLETE WITH GAUGE?
Replace 0 with "M" the the 6th digit of the part nr. for example:

075.16.M0025 FR+L1/2" 075 20 08R PESS + GAUGE

LINE 075 1/2 | F+R+L UNITS

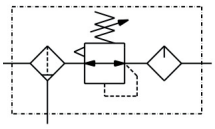

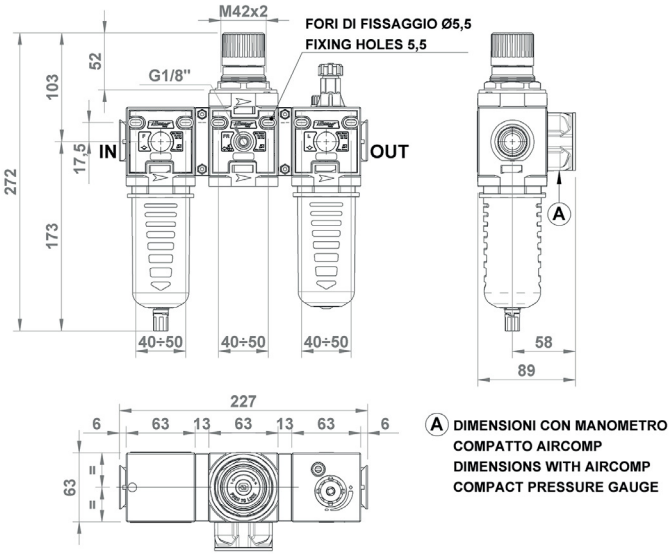

GENERAL FEATURES

Unit consisting of Filter + Regulator + Lubricator.
It combines the functions of filtration, pressure regulation and lubrication of compressed air for industrial applications.
Set delivering a big flow rate and regulation sensitivity, filtration with high condensate separation.
It is equipped with semiautomatic drain as standard (SS).
Available options: float type automatic drain (SA) and differential (SAD), that can convey condensate to the outside even when the bowl is pressurized.
Bowl made from hardened polyamide with outer guard.

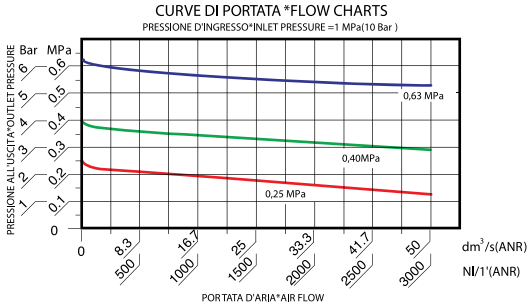

GENERAL TECHNICAL DATA

INLET-OUTLET connections	G1/2"
Pressure range	0-4; 0-8; 0-12 Bar
Working pressure	0,5 – 12,5 Bar
Working pressure with automatic drain	model SA: 1,5 – 10 Bar model SAD: 2 – 12 Bar
Filtering degree	5 micron; 20 micron
Reference flow rate (P1= 6,3 bar ΔP= 1 bar)	2.200 Nl/min
Working temperature (a 10 bar)	-5 / +50°C*
Max Torque IN-OUT	1/2" 80 Nm
Max tourque gauge port	**round:** 10 Nm **compact:** manual
Weight	1,23 kg

Below 3°C the air of the circuit must be free from humidity

ORDERING CODE

CODE	REF.
075.15.00025	F+R+L 1/2" 075 20 08 R PE SS
075.15.00041	F+R+L 1/2" 075 20 12 R PE SS
075.15.00043	F+R+L 1/2" 075 5 08 R PE SS
075.15.00044	F+R+L 1/2" 075 5 12 R PE SS
075.15.00501	F+R+L 1/2" 075 20 08 R PE SS VL
Float type automatic drain version.	
075.15.00026	F+R+L 1/2" 075 20 08 R PE SA
075.15.00046	F+R+L 1/2" 075 20 12 R PE SA
"Differential" automatic drain version.	
075.15.00067	F+R+L 1/2" 075 20 08 R PE SAD
075.15.00069	F+R+L 1/2" 075 20 12 R PE SAD

GUIDE TO REFERENCES

F+R+L 1/4" 042 20 08 R PE SS

Product
- **F+R+L** = Filtro + Regolatore + Lubricator

Connection
- **1/4"** = G 1/4"
- **3/8"** = G 3/8"
- **1/2"** = G 1/2"
- **3/4"** = G 3/4"
- **1"** = G 1"

Line
- **042**
- **050**
- **052**
- **075**
- **080**
- **095**

Filtering element
- **5** = 5 micron
- **20** = 20 micron

Range of pressure
- **04** = 0 - 4 Bar
- **08** = 0 - 8 Bar
- **12** = 0 - 12 Bar

Version
- **R** = Relieving

Bowl
- **TT** = Transparent (Line 042 only)
- **TC** = Short transparent (Line 042 only)
- **PE** = With outer guard

Condensate Drain
- **SS** = Semiautomatic (standard)
- **SA** = Automatic float type
- **SAD** = Automatic differential
- **S18** = Open seat 1/8 F

WOULD YOU LIKE TO ORDER
THE REGULATOR COMPLETE WITH GAUGE?
Replace 0 with "M" the the 6th digit of the part nr. for example:

075.15.M0025 F+R+L1/2" 075 20 08R PESS + GAUGE

LINE **075 1/2** | V3+FR+L UNITS

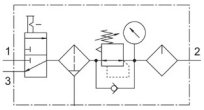

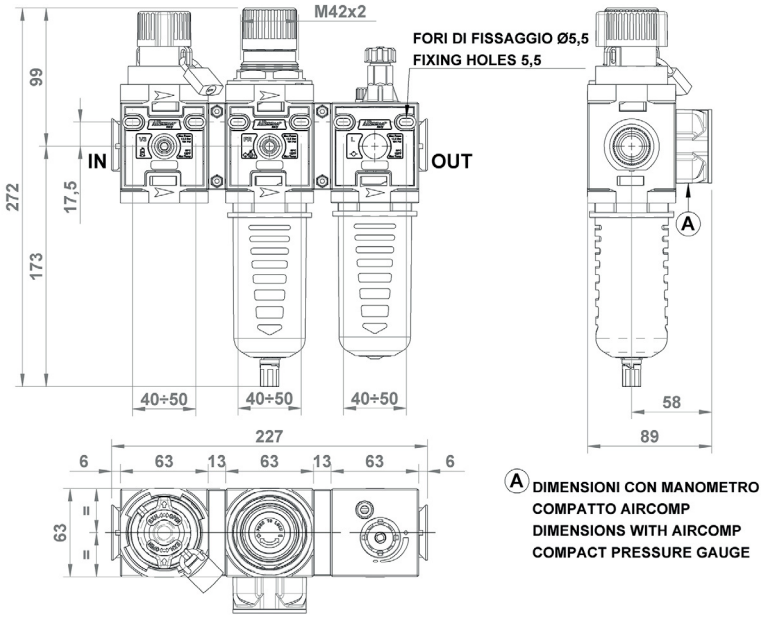

GENERAL FEATURES

Unit consisting of 3-way Valve (V3) + Filter regulator (FR) + Lubricator (L).
It combines the function of shutting-off the system along with the filtration, pressure regulation and lubrication of compressed air for industrial applications.
Lockable V3 valve for greater safety during maintenance operations.
It is equipped with semiautomatic drain as standard (SS).
Available options:float type automatic drain (SA) and differential (SAD), which can discharge to the outside the condensate even when the bowl is pressurized.

GENERAL TECHNICAL DATA

INLET-OUTLET connections	1/2"
Pressure range	0-4; 0-8; 0-12 Bar
Working pressure	0,5 – 12,5 Bar
Working pressure with automatic drain	model SA: 1,5 – 10 Bar
	model SAD: 2 – 12 Bar
Filtering degree	5 micron; 20 micron
Reference flow rate (P1= 10 bar ΔP= 1 bar)	3.075 Nl/min
Reference flow rate (P1= 6,3 bar ΔP= 1bar)	2.200 Nl/min
Working temperature (a 10 bar)	-5 / +50°C*
Max Torque In OUT	1/2" 80 Nm
Max tourque gauge port	10 Nm
Weight	1,35 kg

Below 3°C the air of the circuit must be free from humidity

ORDERING CODE

CODE	REF.
075.36.00025	V3+FR+L 1/2" 075 20 08 R PE SS
075.36.00053	V3+FR+L 1/2" 075 20 12 R PE SS
075.36.00064	V3+FR+L 1/2" 075 5 04 R PE SS
075.36.00065	V3+FR+L 1/2" 075 5 08 R PE SS
075.36.00066	V3+FR+L 1/2" 075 5 12 R PE SS
075.36.00501	V3+FR+L 1/2" 075 20 08 R PE SS VL
075.36.00505	V3+FR+L 1/2" 075 20 12 R PE SS VL
Float type automatic drain version.	
075.36.00026	V3+FR+L 1/2" 075 20 08 R PE SA
075.36.00068	V3+FR+L 1/2" 075 20 12 R PE SA
"Differential" automatic drain version.	
075.36.00072	V3+FR+L 1/2" 075 20 08 R PE SAD
075.36.00073	V3+FR+L 1/2" 075 20 12 R PE SAD

GUIDE TO REFERENCES

V3+FR+L 1/4" 042 20 08 R PE SS

Product
- **V3+FR+L** = V3 + Filter regulator + Lubricator

Connection
- **1/4"** = G 1/4"
- **3/8"** = G 3/8"
- **1/2"** = G 1/2"
- **3/4"** = G 3/4"
- **1"** = G 1"

Line
- **042**
- **050**
- **052**
- **075**
- **080**
- **095**

Filtering element
- **5** = 5 micron
- **20** = 20 micron

Range of pressure
- **04** = 0 - 4 Bar
- **08** = 0 - 8 Bar
- **12** = 0 - 12 Bar

Version
- **R** = Relieving

Bowl
- **TT** = Transparent (Line 042 only)
- **TC** = Short transparent (Line 042 only)
- **PE** = With outer guard

Condensate Drain
- **SS** = Semiautomatic (standard)
- **SA** = Automatic float type
- **SAD** = Automatic differential
- **S18** = Open seat 1/8 F

WOULD YOU LIKE TO ORDER THE REGULATOR COMPLETE WITH GAUGE?

Replace 0 with "M" the the 6th digit of the part nr. for example:

075.36.M0025 V3+FR+L1/2" 075 20 08R PE SS + GAUGE

LINE 075 1/2 | F + L UNITS

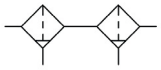

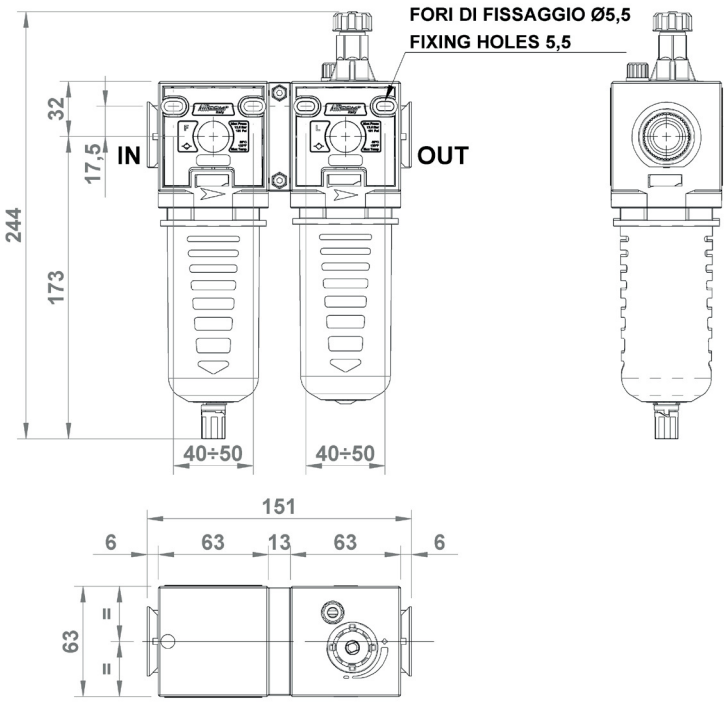

GENERAL FEATURES

Unit consisting of Filter and Lubricator.
It combines the functions of filtration and lubrication of compressed air for industrial applications.
Proportional oil mist lubricator ensuring a constant oil delivery over time.
Bowl made from hardened polyamide with outer guard.

GENERAL TECHNICAL DATA

INLET-OUTLET connections	1/2"
Working pressure	0,5 – 12,5 Bar
Drain working pressure.	model SA: 1,5 – 10 Bar model SAD: 2 – 12 Bar
Filtering degree	5 micron; 20 micron
Reference flow rate (P1= 10 bar ΔP= 1 bar)	3.000 Nl/min
Working temperature (a 10 bar)	-5 / +50°C*
Max Torque IN-OUT	1/2" 80 Nm
Recommended oil viscosity	ISO VG32
Weight	0,800 kg

Below 3°C the air of the circuit must be free from humidity

ORDERING CODE

CODE	REF.
075.17.00025	F+L 1/2" 075 20 PE SS
075.17.00031	F+L 1/2" 075 5 PE SS
075.17.00501	F+L 1/2" 075 20 PE SS VL
Float type automatic drain version.	
075.17.00026	F+L 1/2" 075 20 PE SA
075.17.00032	F+L 1/2" 075 5 PE SA
075.17.00511	F+L 1/2" 075 20 PE SA VL
"Differential" automatic drain version.	
075.17.00033	F+L 1/2" 075 20 PE SAD
075.17.00034	F+L 1/2" 075 5 PE SAD

GUIDE TO REFERENCES

F + L 1/4" 042 20 PE SS

Product
- **F+L** = Filter + Lubricator

Connection
- **1/4"** = G 1/4"
- **3/8"** = G 3/8"
- **1/2"** = G 1/2"
- **3/4"** = G 3/4"
- **1"** = G 1"

Line
- **042**
- **050**
- **052**
- **075**
- **080**
- **095**

Filtering element
- **5** = 5 micron
- **20** = 20 micron

Bowl
- **TT** = Transparent (Line 042 only)
- **TC** = Short transparent (Line 042 only)
- **PE** = With outer guard

Condensate Drain
- **SS** = Semiautomatic (standard)
- **SA** = Automatic float type
- **SAD** = Automatic differential
- **S18** = Open seat 1/8 F

LINE 075 1/2 | F + MF UNITS

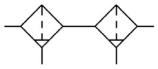

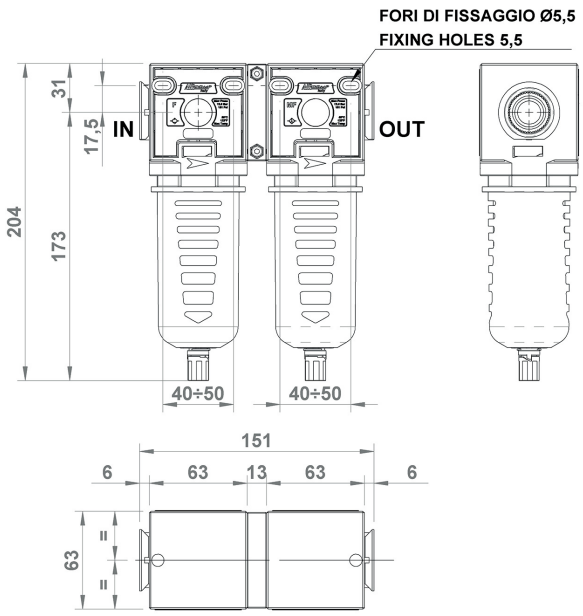

GENERAL FEATURES

Filtration set combining Filter with high condensate separation and coalescing Microfilter.
The job of the Filter is filtering solid particles and condensate separatation. The job of the coalescing Microfilter is to remove oil.
It is equipped with semiautomatic drain as standard (SS).
Available options: float type automatic drain (SA) and differential drain (SAD) that can convey condensate to to the outside even when the bowl is pressurized.
Bowl made from hardened polyamide with outer guard.

GENERAL TECHNICAL DATA

INLET-OUTLET connections	G1/2"
Working pressure	0,5 – 12,5 Bar
Drain working pressure	model SA: 1,5 – 10 Bar model SAD: 2 – 12 Bar
Filtering degree Filter	5 micron
Filtering degree Microfilter	0,01 micron
Recommended max flow rate (P1= 10 bar ΔP= 1 bar)	800 Nl/min
Working temperature (a 10 bar)	-5 / +50°C*
Max Torque IN-OUT	1/2" 80 Nm
Weight	0,76 kg

Below 3°C the air of the circuit must be free from humidity

GUIDE TO REFERENCES

F 1/4" 5 PE SS +
MF 1/4" 042 0,01 TT SS

Product
- **F** = Filter + Microfilter
- **MF** = Microfilter
- **CF** = Activated carbon

Connection
- **1/4"** = G 1/4"
- **3/8"** = G 3/8"
- **1/2"** = G 1/2"
- **3/4"** = G 3/4"

Line
- **042**
- **050**
- **052**
- **075**
- **080**

Condensate Drain
- **SS** = Semiautomatic (standard)
- **SA** = Automatic float type
- **SAD** = Automatic differential
- **S18** = Open seat 1/8 F

Bowl
- **TT** = Transparent (Line 042 only)
- **TC** = Short transparent (Line 042 only)
- **PE** = With outer guard

Filtering element
- **5** = 5 micron
- **20** = 20 micron
- **0,01** = 0,01 micron

ORDERING CODE

CODE	REF.
075.19.00001	F 1/2" 075 5 PE SS+MF 1/2" 075 0,01 PE SS
Float type automatic drain version.	
075.19.00002	F 1/2" 075 5 PE SS+MF 1/2" 075 0,01 PE SA
"Differential" automatic drain version.	
075.19.00004	F 1/2" 075 5 PE SS+MF 1/2" 075 0,01 PE SAD

COALESCENT CARTRIDGE

FUNCTIONING

The air with impurity enter into the special cartridge with high efficiency, that stop solid particles, capture and join outside particles of oil and condensate (coalescent effect). In this way, they easily fall down at the bottom of the bowl, where condensate is discharged. Filtered air obtained is without solid and liquid parts.

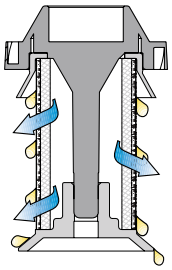

LINE **075 1/2** | F + MF + CF UNITS

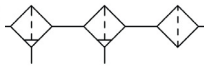

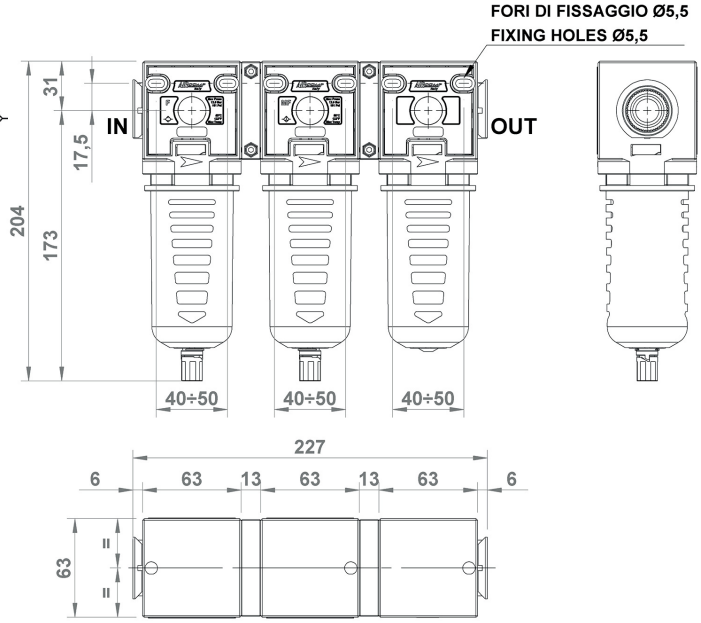

GENERAL FEATURES

Filtration set combining Filter with high condensate separation, coalescing Microfilter and activated carbon Filter.
The job of the unit is to filter solid particles and separate condensate with the Filter along with the coalescing function of the Microfilter, besides removing unpleasant smells in the air circuit aimed at the industrial sector by means of the activated carbon.
It is equipped with semiautomatic drain as standard (SS) on F and MF.
Available options: float type automatic drain (SA) and differential drain (SAD) that can convey condensate to to the outside even when the bowl is pressurized.
Bowl made from hardened polyamide with outer guard.

GENERAL TECHNICAL DATA

INLET-OUTLET connections	G1/2"
Working pressure	0,5 – 12,5 Bar
Working pressure with automatic drain	model SA: 1,5 – 10 Bar model SAD: 2 – 12 Bar
Filtering degree Filter	5 micron
Filtering degree Microfilter	0,01 micron
Activated carbon cartridge CF	
Recommended max flow rate (P1= 10 bar ΔP= 1 bar)	800 Nl/min
Working temperature (a 10 bar)	-5 / +50°C*
Max Torque IN-OUT	1/2" 80 Nm
Weight	1,150 kg

Below 3°C the air of the circuit must be free from humidity

ORDERING CODE

CODE	REF.
075.18.00001	F 5 PE SS + MF 0,01 PE SS + CF PE 1/2 075
075.18.00002	F 5 PE SS + MF 0,01 PE SA + CF PE 1/2 075

GUIDE TO REFERENCES

F 1/4" 042 5 PE SS +
MF 1/4" 042 0,01 PE SS +
CF 1/4" 042 CA PE

Product
- **F** = Filtro + Microfilter
- **MF** = Microfilter
- **CF** = Activated carbon

Connection
- **1/4"** = G 1/4"
- **3/8"** = G 3/8"
- **1/2"** = G 1/2"
- **3/4"** = G 3/4"

Line
- **042**
- **050**
- **052**
- **075**
- **080**

Condensate Drain
- **SS** = Semiautomatic (standard)
- **SA** = Automatic float type
- **SAD** = Automatic differential
- **S18** = Open seat 1/8 F

Bowl
- **TT** = Transparent (Line 042 only)
- **TC** = Short transparent (Line 042 only)
- **PE** = With outer guard

Filtering element
- **5** = 5 micron
- **20** = 20 micron
- **0,01** = 0,01 micron
- **CA** = Activated carbon