typ: **1/041**

2/2 solenoidový ventil nuceně řízený G1/4"- G2", Pmax. 130 bar

2/2-way solenoid valve
NC - Valve normally closed (as standard)
NO - Valve normally open (as option)

Force-pilot operated piston design valve. No differential pressure is necessary for operation. In standard (NC) the valve closes with spring power.

- **Solenoid valve for high pressure applications**

TECHNICAL SPECIFICATIONS

Type of control	Force-pilot operated
Design	Piston design
Connection	Threaded G1/4 - G2 DIN ISO 228/1 (BSP) Further connections like NPT on request
Installation	With actuator upright
Pressure	0 - 130 bar (see table on page 2)
Medium	Clean, neutral, gaseous and liquid media
max. viscosity	22 mm²/s
Temperature range	Medium: -40 °C up to +80 °C Ambient: -10 °C up to +50 °C In consideration of the restrictions described on page 4
Body material	Brass 2.0401 Stainless steel 1.4408
Metallic inner parts	Brass and Stainless steel
Sealing	PTFE
Supply voltage	AC~ 24V, 110V, 230V DC= 12V, 24V Other supply voltages on request
Voltage tolerance	-10% / +10%
Power consumption	.242 = 46 Watt .248 = 30 Watt .272 = 100 Watt .278 = 47 Watt .352 = 150 Watt .358 = 75 Watt
Protection class	IP65 acc. to DIN 60529
Duty factor	100% ED-VDE 0580
Connection type	Terminal box
Ex-proof	acc. to 2014/34/EU (ATEX) Further Ex-proof on request

VALVE FEATURES

- For high pressure applications up to 450 bar
- No pressure difference required
- High life time
- High-quality materials
- Reliable and sturdy sealing elements
- Pneumatic actuator on request

FUNCTION

NC – non energized closed

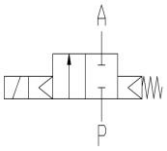

NO – non-energized open

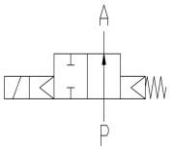

CERTIFICATES

ORDERING SYSTEM

Type						Connect.		Housing		Seal			Coil			
1	/	0	4	1	-	2	3	-	1	0	0	4	-	.	2	4	2

Connect.		Housing		Seal		Coil	
21	G 1/4	08	St. steel 1.4408	04	PTFE	2	Standard IP65
22	G 3/8	10	Brass 2.0401			8	Explosion proof acc. to directive 2014/34/EU (ATEX)
23	G 1/2						
24	G 3/4						
25	G 1						
26	G 1 1/4						
27	G 1 1/2						
28	G 2						

2/2 solenoidový ventil nuceně řízený, řada 1/041, G1/4"- G2"

TECHNICAL FEATURES

				max. pressure for coils		
G	Seat Ø mm	Kv-value m³/h	Standard type	.242	.272	.352
1/4	13	1,8	1/041-21-..04-	0-70	0-100	0-130
3/8	13	3,3	1/041-22-..04-	0-70	0-100	0-130
1/2	13	3,8	1/041-23-..04-	0-70	0-100	0-130
3/4	25	11,5	1/041-24-..04-	0-70	0-100	0-100
1	25	13,0	1/041-25-..04-	0-70	0-100	0-100
1 1/4	32	22,0	1/041-26-..04-	-	0-70	0-100
1 1/2	40	24,0	1/041-27-..04-	-	0-70	0-100
2	50	32,0	1/041-28-..04-	-	0-70	0-80

The flow rate mentioned in the table applies to the strongest coil.

				max. pressure for coils ATEX	
G	Seat Ø mm	Kv-value m³/h	Standard type	.278	.358
1/4	13	1,8	1/041-21-..04-	0-70	0-100
3/8	13	3,3	1/041-22-..04-	0-70	0-100
1/2	13	3,8	1/041-23-..04-	0-70	0-100
3/4	25	11,5	1/041-24-..04-	0-70	0-100
1	25	13,0	1/041-25-..04-	0-70	0-100
1 1/4	32	22,0	1/041-26-..04-	-	0-70
1 1/2	40	24,0	1/041-27-..04-	-	0-70
2	50	32,0	1/041-28-..04-	-	0-70

The flow rate mentioned in the table applies to the strongest coil.

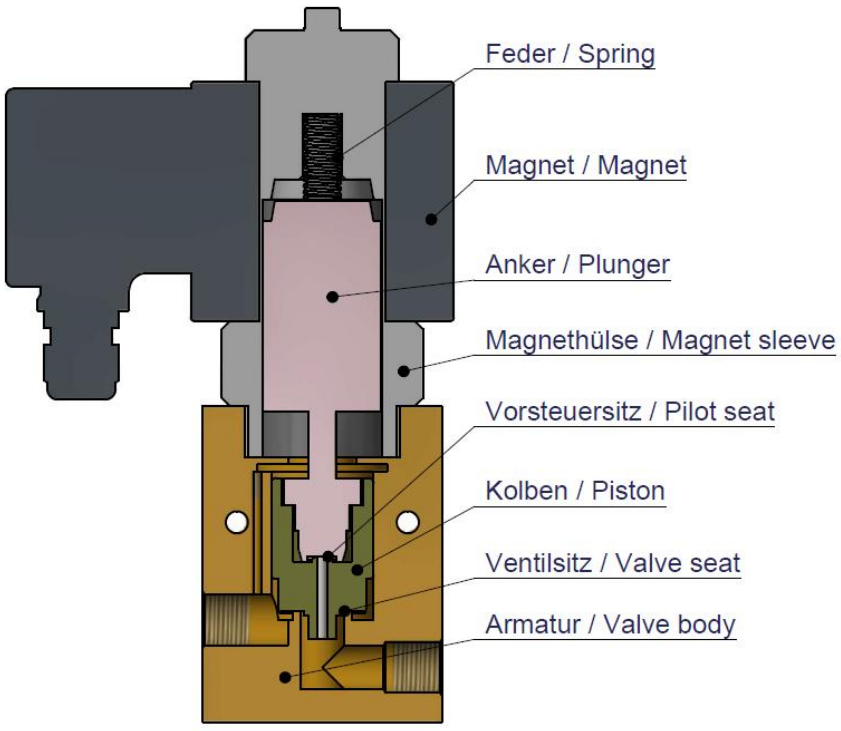

2/2 solenoidový ventil nuceně řízený, řada 1/041, G1/4"- G2"

DIMENSIONS

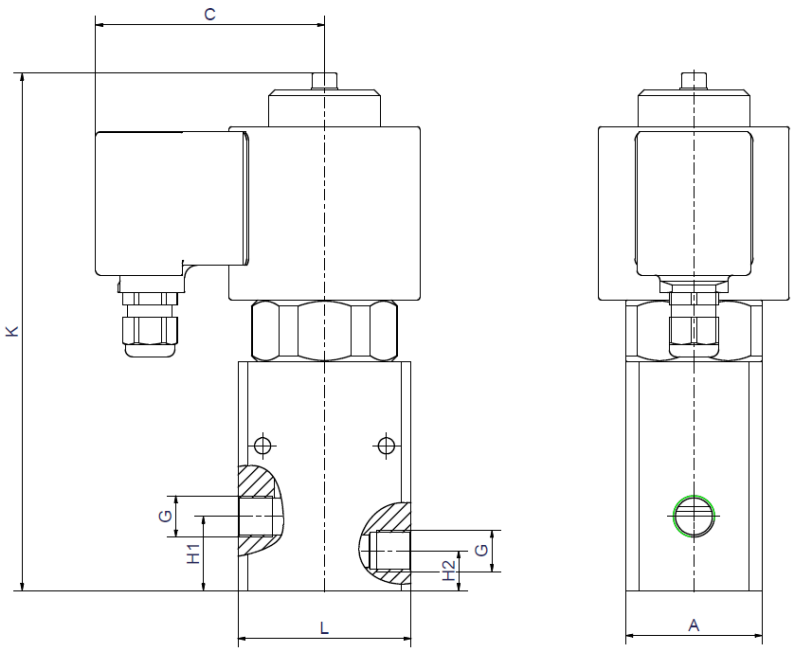

Coil	.242 / .248		.272 / .278			
Type	1/041-21(-23)	1/041-24(-25)	1/041-21(-23)	1/041-24(-25)	1/041-26(-27)	1/041-28
G	1/4 - 1/2	3/4 - 1	1/4 - 1/2	3/4 - 1	1 1/4 - 1 1/2	2
C	92	92	106	106	106	106
H1	30	45	30	45	33	38,5
H2	16	25	16	25	33	38,5
K	210	255	252	260	310	297
A	55	65	55	65	96	119
L	70	100	70	100	140	168
t	14	17	14	17	22	24
kg	5,2	9,0	9,0	12,0	15,0	21,2

Coil	.352 / .358			
Type	1/041-21(-23)	1/041-24(-25)	1/041-26(-27)	1/041-28
G	1/4 - 1/2	3/4 - 1	1 1/4 - 1 1/2	2
C	126	126	126	126
H1	30	45	33	38,5
H2	16	25	33	38,5
K	326	359	368	363
A	55	65	96	119
L	70	100	140	168
t	14	17	22	24
kg	22,0	24,5	27,0	48,6

INFORMATION

- It is imperative to observe the installation and safety instructions in our operating and service manuals.
- For information on our GSR ordering code, please refer to our catalogs. If you have any questions, we will be glad to assist you.
- Required ordering information: valve type, function NC/NO, pressure range, connection, nominal width, medium, flow rate, medium and ambient temperatures, connection voltage.
- **Detailed production-specific drawings and other technical information will be made available when an order is placed**

PLEASE NOTE

Each individual application decides which valve type is required, the main factor being the resistance of the materials to the operating medium. The correct selection of materials requires knowledge of the concentration, temperature and degree of contamination of the medium. Other criteria include the operating pressure and max. volumetric flow, since , in addition to high temperatures , high pressures and high flow rates must also be taken into account when selecting the materials.

All materials used for our valves, be it housing, seals or magnets, will be carefully selected in view of the different application areas. Any information given is non-binding and serves for orientation only. No claims under warranty can be derived therefrom.

Heating and power of solenoid coils

The GSR default solenoid valves are designed for continuous operation (100% ED = power-on time) under normal operating conditions. The pulling force of a solenoid coil is basically influenced by three elements:

- The self-heating of the magnetic coil
- The medium temperature
- The ambient temperature

GSR solenoid coils are by default designed for a maximum ambient temperature of +35 °C. This specification applies for the maximum allowable operating pressure specified in the data sheet of the corresponding valve, 100% duty cycle and a medium temperature of +80 °C.

A higher ambient temperature is possible, when lower values are applied for the other influencing parameters. When the max. operation pressure and max. ambient temperature of +50 °C is given the medium temperature is not allowed to be higher than max. +50 °C. In addition to that, deviations from the default design temperature range are possible, e.g. when temperature coils or other constructive measures are used. Please contact the GSR headquarters to discuss the specific application.

More precise specifications and technical data with regard to the operating conditions can be found in the data sheets of the solenoid coils and the solenoid valve regarded. Please observe that the surface temperature of a permanently loaded coil can amount up to +120 °C, solely by the self-heating of the coil. The power consumption of our default solenoid valves was calculated to DIN VDE 05820 for a coil temperature of +20 °C.

- The GSR logo is a registered trademark of GSR Ventiltechnik GmbH & Co. KG.
- Note: All texts and images are the property of GSR Ventiltechnik GmbH & Co. KG and must not be replicated or modified, not even in part, without written approval.
- Original products may differ from the product images shown, due to different materials and the like.
- Subject to error and changes.

Stand: 12.17, MK-MG, Version 1.