LUCIFER®

Solenoid Valves

3- & 4-way valves

for actuator control

Parker

FLUIDS UNDER CONTROL

FLUIDTECHNIK BOHEMIA s. r. o.
Olomoucká 87
CZ-627 00 Brno
tel : 548 213 233 - 235
fax : 548 213 238
http://www.fluidbohemia.cz
brno@fluidbohemia.cz

Contents

	Page
Introduction	2
How to select your valve	3
How to order your valve	3
3- & 4-way pneumatic valves for actuator control (pipe mounted and with NAMUR interface)	225
3-way stackable solenoid valves for actuator control	233
3- & 4-way pneumatic valves for actuator control (pipe mounted and with NAMUR interface)	238
316L St. Steel 3- & 4-way pneumatic valves for Offshore applications)	273
316L St. Steel 3- & 4-way pneumatic valves for actuator control (pipe mounted and with NAMUR interface)	287
EExPress Bus Manifold for actuator control	317
Electropneumatic Pressure regulators - EPP Series	323
Electrical parts (coils & housings)	333
Additional information	384
Technical information about Lucifer valves	385
Fluid compatibility chart	388
Index by reference numbers - cross reference list	390
Distribution network	398

How to select your valve

This catalogue has been designed to make selection as easy as possible. The structure allows you to find your valve step by step, beginning with the most basic features and gradually focusing on more and more precise details.

First, decide what kind of valve you want: 2-way, 3-way, pneumatic or special. Then check the contents page and turn to the beginning of the relevant section.

For ease of use, each valve section is divided by application. At the front of the application sub-section you choose, you will find an overview table of the products featured (see sample below).

Using the table as a guide, decide what kind of actuation you want, then go across the columns, choosing the body material, function, connection, orifice size and maximum pressure: this process takes you to the specific page number with your product,

Further technical information to help with specification is given in the final section of the catalogue.

General application valves for dry or lubricated air, neutral gases and liquids 2/2

ACTUATION	BODY MATERIAL	FUNCTION	CONNECTION	ORIFICE (MM)	MAX. PRESSURE (BAR)	PAGE
Direct operated	Brass body	Normally closed	1/8	1.5 to 3	70.0	8
			1/4	1.2 to 5	100.0	8
			3/8	4 to 6	10.0	12
			1/2	8.5 to 11	4.0	12
			SB	1.5 to 3	100.0	14

How to order a valve

Normally a complete valve is composed of 3 elements: the valve itself (body + pilot), the coil and the housing. For integrated coil/housings, the housing reference indicates the fixing nut and nameplate.

Two valve body references are indicated in the tables:

- the Lucifer reference
- the global reference

Either reference can be used when ordering. The Global valve reference permits a common numbering system between Lucifer and Skinner products. A complete cross-reference list of valve reference numbers can be found at the end of this catalogue. In both cases, it is necessary to order the coil and housing reference as well.

Port size	Orifice (mm)	Flow factors (L/min)			Admissible differential pressure bar			Fluid temp. °C			Seat disc	Reference numbers				Power consumption (W)		Wt. (g)	El. Part Group *	Dim ref.
		Liquids		Gases	Min	Max								OR						
G		kv	Qmax	Qn		DC	AC	Gas	Liquid	Oil		Global valve reference	Valve reference no.	Housing	Coil	DC	AC			

Brass body/Pipe mounting

Normally closed

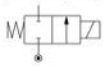

1/8	1.5	1.5	6	80	0	20	20	75	75	75	FKM	7121CBG1GV00	**121C14**	**2995**	**481865**	9	8	270	2	2
	1.5	1.5	6	80	0	20	20	75	75	75	FKM			**4270**	**481000**	8	8	390	2	
	1.5	1.5	6	80	0	20	20	75	75	75	FKM			**2995**	**482730**	7	6	270	2	
	1.5	0.9	2.4	70	0	12	20	75	75	75	FKM	-	**121M14**	**8993**	**481180**	5	4	150	1	1
	1.5	0.9	2.4	70	0	4	20	75	75	75	FKM			**8993**	**488980**	2.5	2	150	1	
	1.5	1.5	12.5	80	0	25	60	75	75	75	PCTFE	7121KBG1GF00	**E121K14**	**2995**	**481865**	9	8	300	2	3
	1.5	1.5	12.5	80	0	30	70	75	75	75	PCTFE			**4270**	**481000**	8	8	420	2	
	1.5	1.5	12.5	80	0	55	70	75	75	75	PCTFE			**4270**	**486265**	14	14	430		
	2	2	8	160	0	7	10	75	75	75	FKM	-	**121M13**	**8993**	**481180**	5	4	150	1	1
	2	2	8	160	0	2.5	10	75	75	75	FKM			**8993**	**488980**	2.5	2	150	1	
	2.5	2.8	8.5	220	0	10	10	75	75	75	FKM	7121CBG1LV00	**E121C13**	**2995**	**481865**	9	8	270	2	2

Therefore please specify:

I. Valve reference **or** Global valve reference
II. Housing
III. Coil
IV. Voltage or voltage code (see tables in the Electrical parts section).

Ordering example:

121K0756-2995-481865-220/50
or
7121KBG2LVMO-2995-481865-220/50

Important : valve, housing or coil can be ordered separately for use as a replacement or spare part.

4-way pneumatic valves for pipe connection/sub-base mounting

ACTUATION	CONNECTION	ORIFICE (MM)	MAX. PRESSURE (BAR)	PAGE
Pilot operated	1/8	4	10.0	196
	1/4	6 to 8	40.0	188/198/202/204
	3/8	8	15.0	200
	1/2	14	15.0	212
	SB	4 to 15	10.0	190/214/216
	CETOP	6	10.0	216
Impulse coil	1/4	8	15.0	192/200
	1/2	14	15.0	212
	SB	15	10.0	194/216
	CETOP	6	10.0	220
Two solenoids and main pressure supply	1/8	4	10.0	198
	1/4	8	10.0	206/208
	SB	4	10.0	214
External pressure supply	CETOP	6	10.0	218
Double external pressure supply	1/4	8	10.0	210

Notes:
Pilot operated valves: pressure range from 1 or 2 bar to max. pressure (refer to tables).

4-way pneumatic valves for pipe connection/sub-base mounting

4/2

Port size G	Orifice (mm)	Flow factors (L/min Qn	Admissible differential pressure bar Min	Max DC	Max AC	Fluid temp. °C Gas	Seat disc	Reference numbers Global valve reference	Valve reference no.	Housing	OR Coil	Power consumption (W) DC	AC	Wt. (g)	El. Part Group *	Dim ref.

Anod. aluminium body/Pipe mounting

4/2 - Pilot operated -

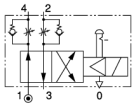

1/4	6	630	1	10	10	75	NBR	7341BAG2JNM0	**341B3403** 1	**2995**	**481865**	9	8	700	2	36
	6	630	1	10	10	75	NBR			**4270**	**481000**	8	8	820	2	
	6	630	1	10	10	75	NBR	7341BAG2JNMR	**341B34** 2	**2995**	**481865**	9	8	700	2	36
	6	630	1	10	10	75	NBR			**4270**	**481000**	8	8	820	2	
	6	630	1	10	-	75	NBR	7341BAG2JNL8	**341B3480** 2	**2995**	**482740**	1.6	-	700	6	36
	6	560	1	10	-	75	NBR	-	**341B3490** 3	**-**	**483580.01** 4	0.4	-	665	7	81

Table continued on page 190

Notes:

* See Electrical Parts Group table at end of section
1. Without flow regulators
2. Flow regulating screws standard
3. Other coil-housing available: 488650.01, 488660.01, 4888670.01 (refer to electrical parts at end of this section)
4. This reference no. is for the complete electrical part (coil + housing)

4-way pneumatic valves for pipe connection/sub-base mounting

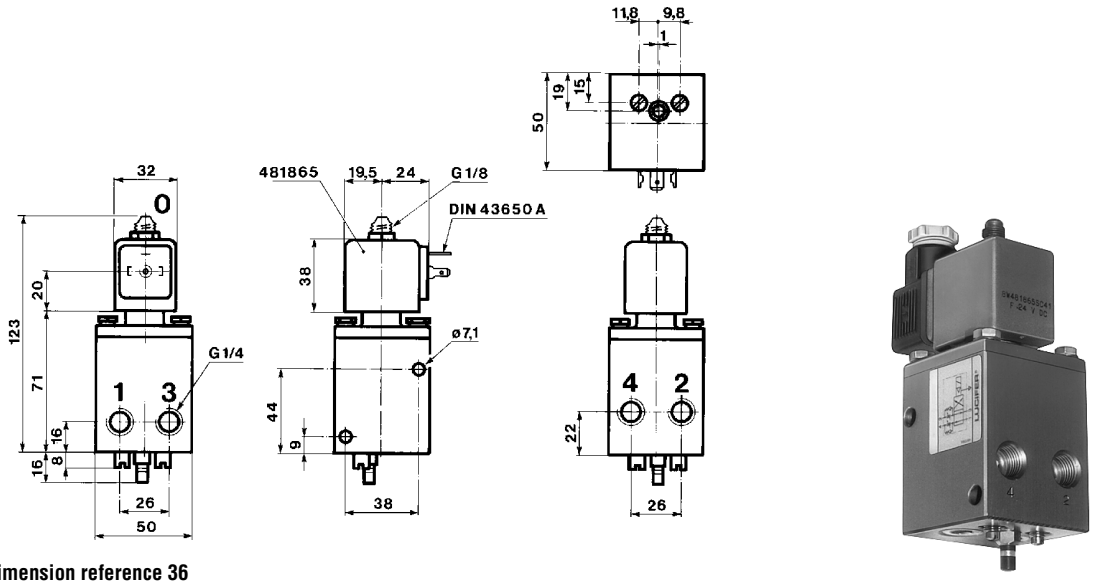

Dimension reference 36

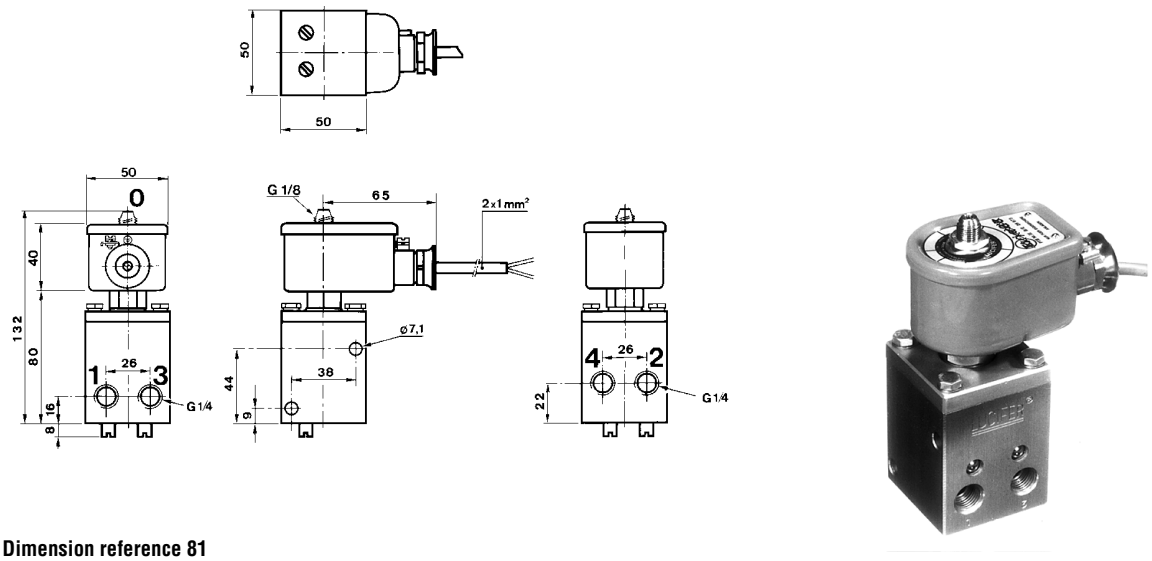

Dimension reference 81

4-way pneumatic valves for pipe connection/sub-base mounting

Port size	Orifice (mm)	Flow factors (L/min	Admissible differential pressure bar			Fluid temp. °C	Seat disc	Reference numbers				Power consumption (W)		Wt. (g)	El. Part Group *	Dim ref.
			Min	Max							OR					
G		Qn		DC	AC	Gas		Global valve reference	Valve reference no.	Housing	Coil	DC	AC			

Anod. aluminium body/Sub-base mounting

4/2 - Pilot operated -

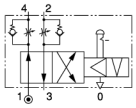

SB	6	630	1	10	10	75	NBR	7341FAS3JNM0	**341F3403** 1	**2995**	**481865**	9	8	700	2	37
	6	630	1	10	10	75	NBR			**4270**	**481000**	8	8	820	2	
	6	630	1	10	10	75	NBR	7341FAS3JNMR	**341F34** 2	**2995**	**481865**	9	8	700	2	37
	6	630	1	10	10	75	NBR			**4270**	**481000**	8	8	820	2	

Table continued on page 192

Notes:

* See Electrical Parts Group table at end of section
1. Without flow regulators
2. Flow regulating screws standard

4-way pneumatic valves for pipe connection/sub-base mounting

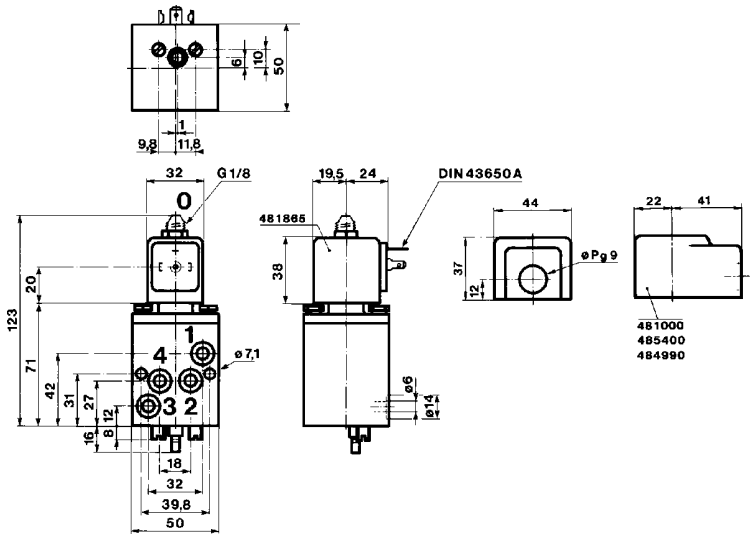

Dimension reference 37

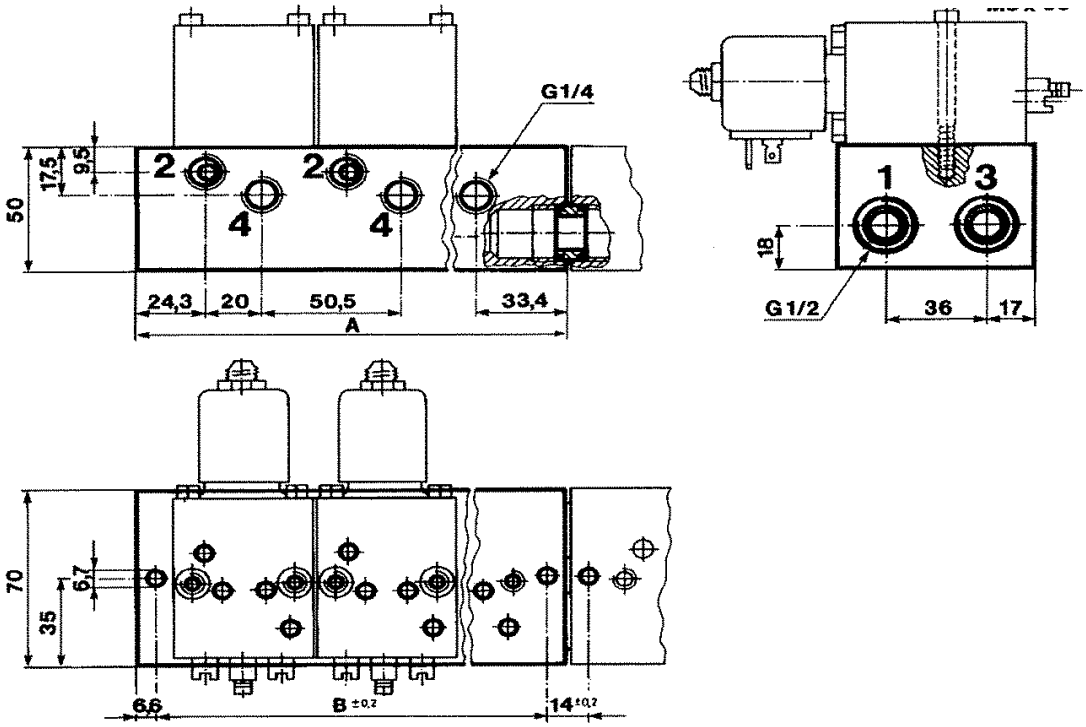

Quantity of valves by assembly	Reference numbers	A mm	B mm	Wt. (g)
2	485635	128.2	115	1000
3	485636	178.7	165.5	1400
5	485637	279.7	266.5	2250

Associated sub-base diagram

4-way pneumatic valves for pipe connection/sub-base mounting

Port size	Orifice (mm)	Flow factors (L/min	Admissible differential pressure bar			Fluid temp. °C	Seat disc	Reference numbers					Power consumption (W)		Wt. (g)	El. Part Group *	Dim ref.
			Min	Max		Gas		Global valve reference	Valve reference no.		OR						
G		Qn		DC	AC					Housing	Coil		DC	AC			

Anod. aluminium body/Pipe mounting

4/2 - Impulse coil -

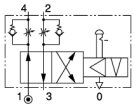

1/4	6	630	1	-	10	75	NBR	7345BAG2JNMR	**345B34** [1]	**4269**	**484990**	-	11	840	4	36
	6	630	1	10	-	75	NBR			**4269**	**485400**	13	-	840	4	

Table continued on page 194

Notes:

* See Electrical Parts Group table at end of section

1. Flow regulating screws standard

4-way pneumatic valves for pipe connection/sub-base mounting

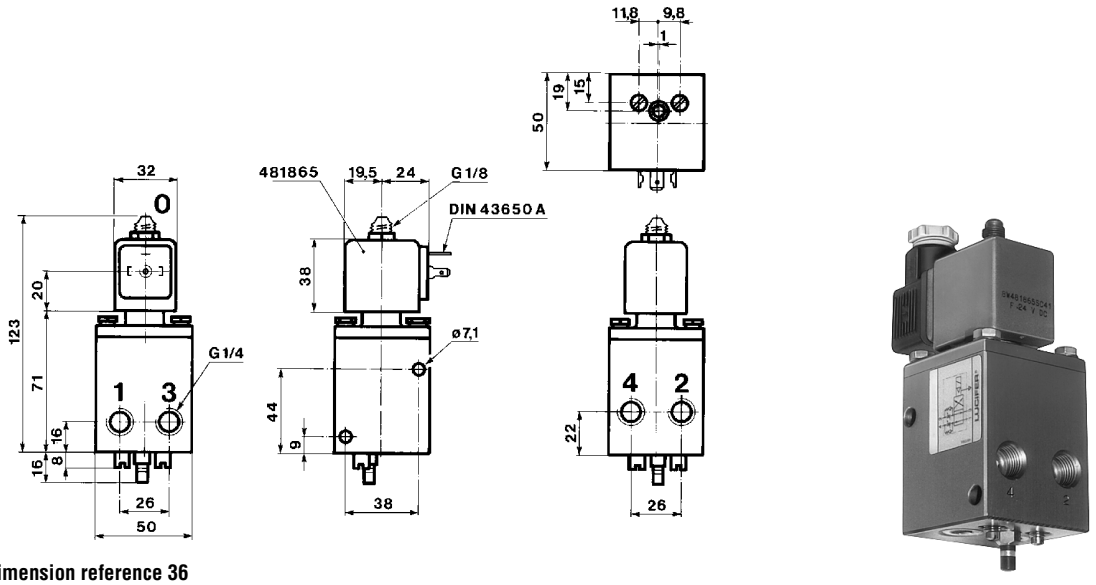

Dimension reference 36

4-way pneumatic valves for pipe connection/sub-base mounting

Port size	Orifice (mm)	Flow factors (L/min	Admissible differential pressure bar			Fluid temp. °C	Seat disc	Reference numbers					Power consumption (W)		Wt. (g)	El. Part Group *	Dim ref.
			Min	Max		Gas		Global valve reference	Valve reference no.		Housing	OR Coil					
G		Qn		DC	AC								DC	AC			

Anod. aluminium body/Sub-base mounting

4/2 - Impulse coil -

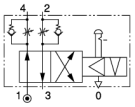

SB	6	630	1	-	10	75	NBR	7345FAS3JNMR	**345F34** 1	**4269**	**484990**	-	11	840	4	37
	6	630	1	10	-	75	NBR			**4269**	**485400**	13	-	840	4	

Notes:

* See Electrical Parts Group table at end of section

1. Flow regulating screws standard

4-way pneumatic valves for pipe connection/sub-base mounting

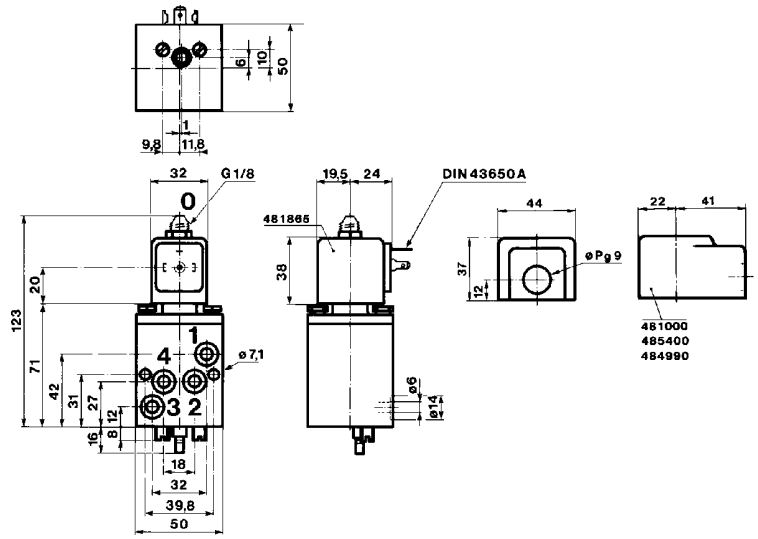

Dimension reference 37

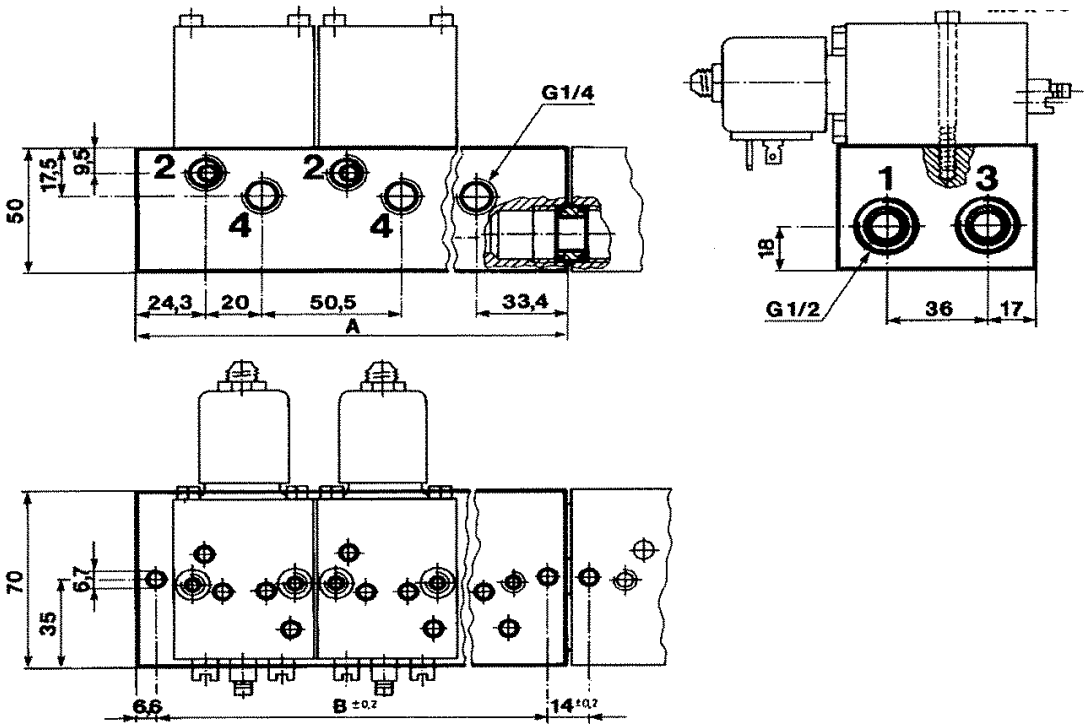

Quantity of valves by assembly	Reference numbers	A mm	B mm	Wt. (g)
2	485635	128.2	115	1000
3	485636	178.7	165.5	1400
5	485637	279.7	266.5	2250

Associated sub-base diagram

Solenoid valves for actuator control

3/2

Applications

3-way directional valves for control of single acting pneumatic actuators.

Port size G	Orifice (mm)	Flow factors (L/min Qn	Admissible differential pressure bar Min	Max DC	Max AC	Fluid temp. °C Min	Max	Seat disc	Reference numbers: Global valve reference	Valve reference no.	Housing	OR Coil	Power consumption (W) DC	AC	Wt. (g)	El. Part Group *	Dim ref.
Brass body/Pipe mounting																	
1/8	1.2	50	0	10	10	-10	75	FKM	-	**131M15**	**8993**	**488980**	2.5	2	150	1	14
	(1.5)	(70)	0	10	10	-10	75	FKM			**8993**	**488980**	2.5	2	150	1	
	1.5	70	0	7	7	-10	75	FKM	-	**131M14**	**8993**	**488980**	2.5	2	150	1	14
1/4	1	38	0	10	-	-10	75	FKM	7131KBG2CV90	**131K0490**	**-**	**483580.01** [1]	0.4	-	285	7	77
	1.5	80	0	7	-	-10	75	FKM	7131KBG2GVL5	**131K0480**	**2995**	**482740**	1.6	-	310	6	17
	1.5	80	0	15	15	-10	100	FKM	7131KBG2GVM0	**E131K0450** [2]	**2995**	**481865**	9	8	310	2	17
	1.5	80	0	15	15	-10	120	FKM			**4270**	**481000**	8	8	430	2	
	1.5	80	0	15	15	-10	100	FKM	7131KBG2GV00	**E131K04**	**2995**	**481865**	9	8	310	2	17
	1.5	80	0	15	15	-10	120	FKM			**4270**	**481000**	8	8	430	2	
	2	140	0	10	10	-10	100	FKM	7131KBG2JVM0	**E131K0650** [2]	**2995**	**481865**	9	8	310	2	17
	(2.5)	(220)	0	10	10	-10	100	FKM			**2995**	**481865**	9	8	310	2	
	2	140	0	10	10	-10	120	FKM			**4270**	**481000**	8	8	430	2	
	(2.5)	(220)	0	10	10	-10	120	FKM			**4270**	**481000**	8	8	430	2	
	2	140	0	10	10	-10	100	FKM	7131KBG2JV00	**E131K06**	**2995**	**481865**	9	8	310	2	17
	(2.5)	(220)	0	10	10	-10	100	FKM			**2995**	**481865**	9	8	310	2	
	2	140	0	10	10	-10	120	FKM			**4270**	**481000**	8	8	430	2	
	(2.5)	(220)	0	10	10	-10	120	FKM			**4270**	**481000**	8	8	430	2	

Direct operated

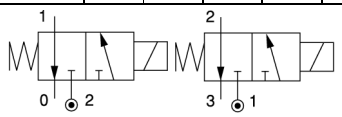

E, K, V Series **T, M Series**

Table continued on page 228

Notes:

* See Electrical Parts Group table at end of section

1. Other coil-housing available: 488650.01, 488660.01, 4888670.01 (refer to electrical parts at end of this section)
2. Manual override standard

Values shown within brackets are valid for exhaust port only.

Solenoid valves for actuator control - 3/2 valves - Pipe connection

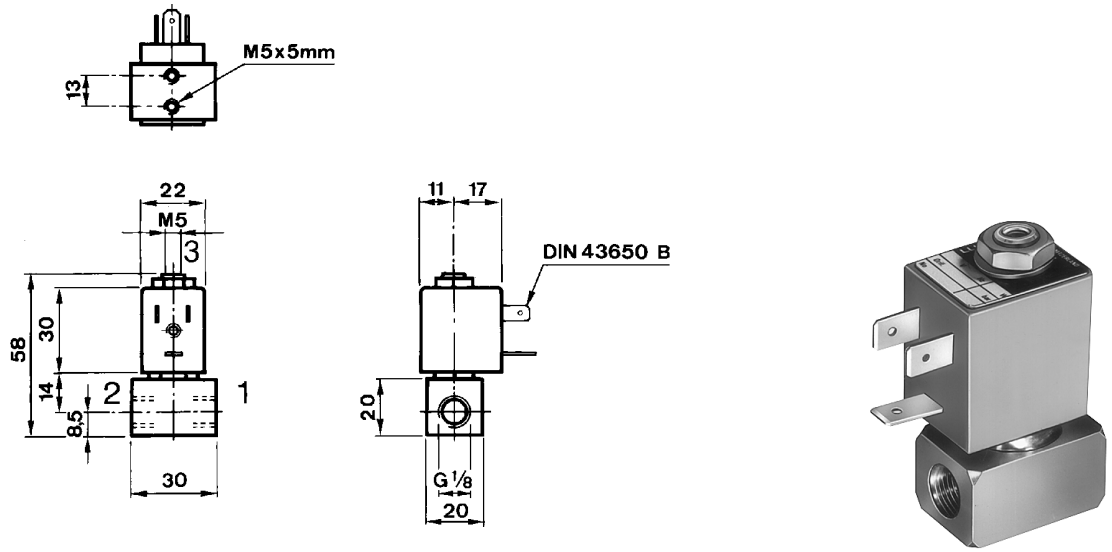

Dimension reference 14

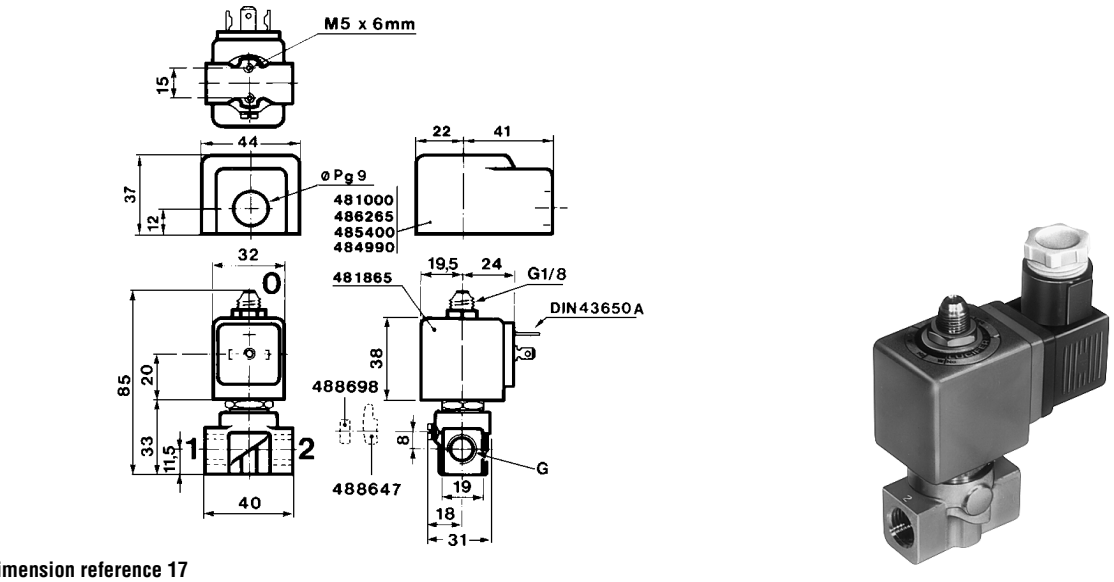

Dimension reference 17

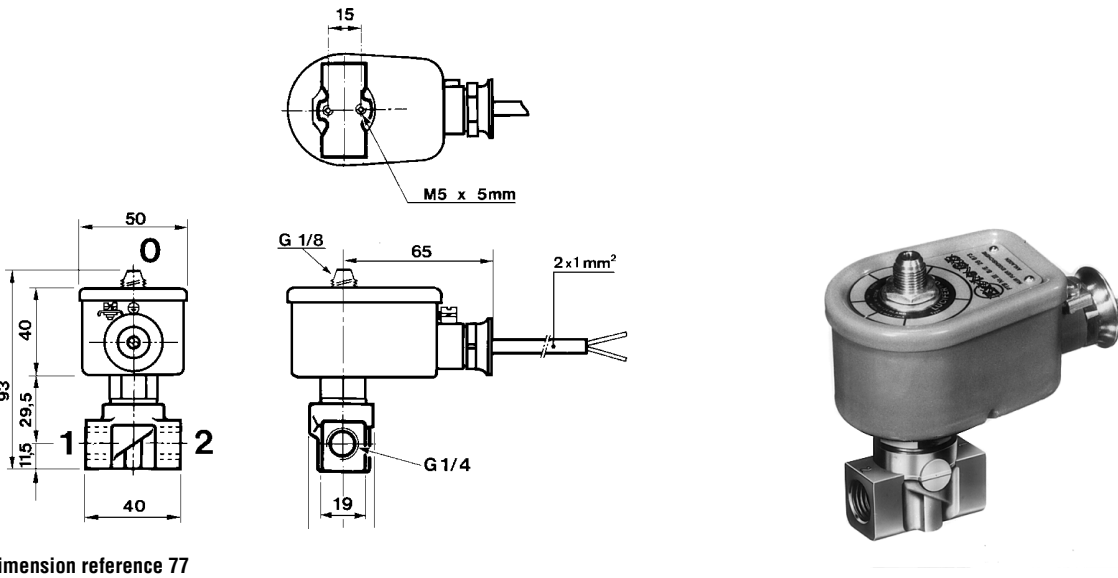

Dimension reference 77

Solenoid valves for actuator control - 3/2 valves - Pipe connection

Port size	Orifice (mm)	Flow factors (L/min	Admissible differential pressure bar			Fluid temp. °C		Seat disc	Reference numbers				Power consumption (W)		Wt. (g)	El. Part Group *	Dim ref.
			Min	Max		Min	Max		Global valve reference	Valve reference no.	Housing	OR Coil					
G		Qn		DC	AC								DC	AC			

Anod. aluminium body/Pipe mounting

Direct operated

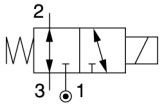

1/4	5	680	0	10	-	-25	65	NBR	-	**133X01** [1]	**-**	**492965.01** [2]	0.8	-	860	9	83
	5	680	0	10	10	-25	65	NBR			**-**	**492300** [2]	6	6	860	9	

Anod. aluminium body/NAMUR interface

Direct operated

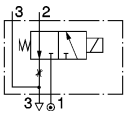

1/4	5	680	0	10	10	-25	75	NBR	7131XAKLVN00	**131X1101**	**-**	**492300** [2]	6	6	1000	9	84
	5	680	0	10	-	-25	75	NBR			**-**	**483330.01** [2]	0.85	-	1000	9	

Notes:

* See Electrical Parts Group table at end of section

1. Optional manual override available on request - add suffix 50 to the basic reference number
2. This reference no. is for the complete electrical part (coil + housing)

Solenoid valves for actuator control - 3/2 valves - Pipe connection

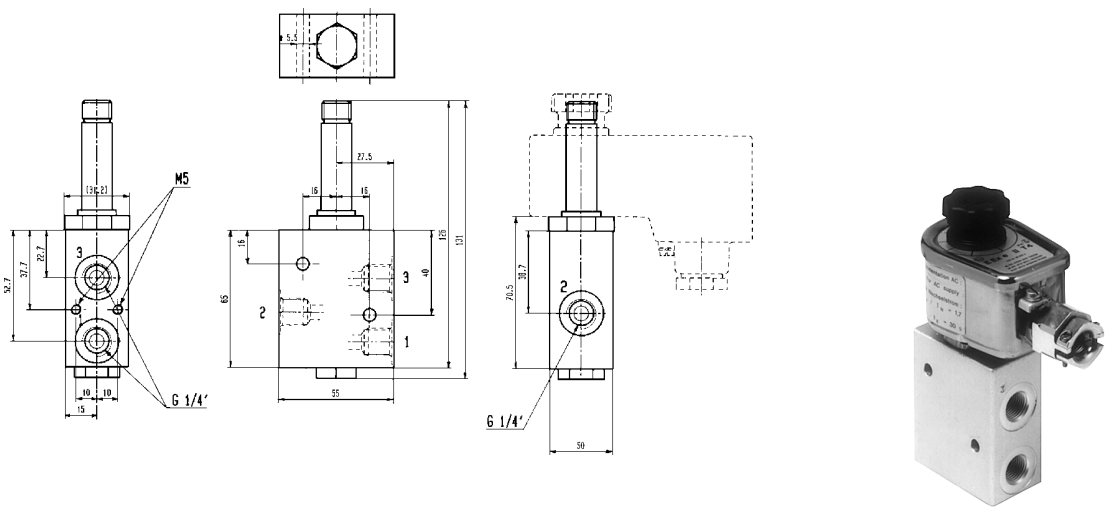

Dimension reference 83

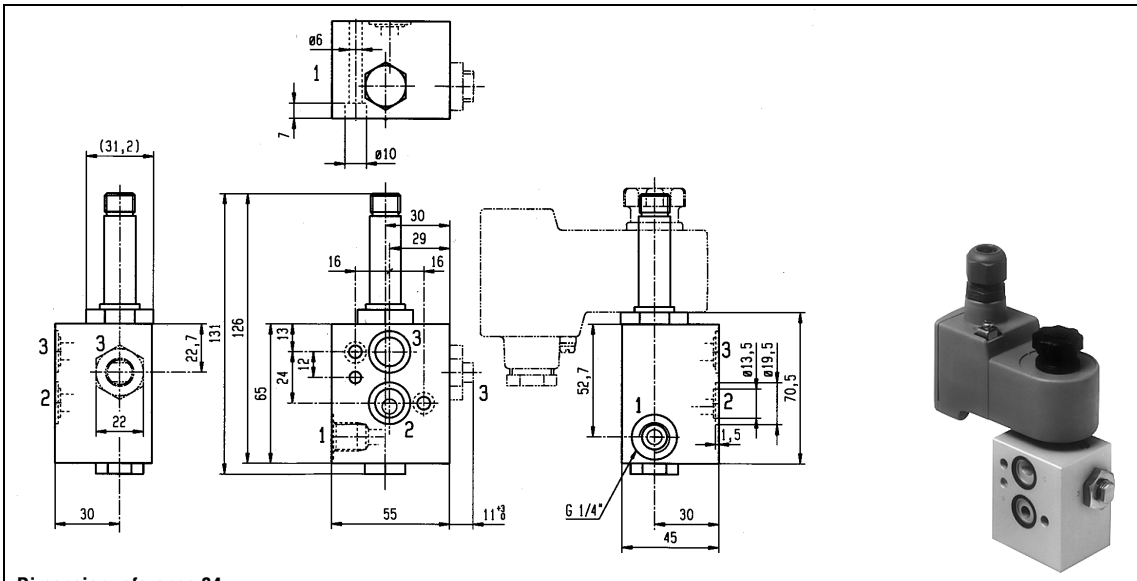

Dimension reference 84

Stackable solenoid valves for actuator control 3/2

ACTUATION	CONNECTION	ORIFICE (MM)	MAX. PRESSURE (BAR)	PAGE
Direct operated	6 6 6	1.3 to 1.5	10.0	234
	8 6 8	1.3 to 1.5	10.0	234
	- 6 -	1.3 to 1.5	10.0	234

Notes:

Solenoid valves for actuator control

5/2

Applications

3- or 4-way directional valves for control of single or double acting pneumatic actuators.

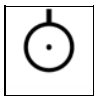

Port size	Orifice (mm)	Flow factors (L/min)	Admissible differential pressure bar			Fluid temp. °C		Seat disc	Reference numbers			OR	Power consumption (W)		Wt. (g)	El. Part Group *	Dim ref.
			Min	Max		Min	Max		Global valve reference	Valve reference no.	Housing	Coil	DC	AC			
G		Qn		DC	AC												
Pilot operated - Integrated pilot																	
Anod. aluminium body/Pipe mounting - Spool design																	
1/8	4	600	2	10	10	-25	80	NBR	2341PAG1JNM0	**341P01** 1	**8993**	**488980**	2.5	2	310	1	201
Pilot operated																	
Anod. aluminium body/Pipe mounting - Spool design																	
1/8	4	600	2	10	10	-25	80	NBR	7341PAG1JNM0	**341P21**	**2995**	**481865**	9	8	360	2	202
	4	600	2	10	10	-25	80	NBR			**4270**	**481000**	8	8	470	2	
	4	600	2	10	10	-40	65	NBR	7341PAG1JPM0	**341P2108** 2	**2995**	**481865**	9	8	360	2	202
	4	600	2	10	10	-40	65	NBR			**4270**	**481000**	8	8	470	2	
	4	600	2	10	-	-25	80	NBR	7341PAG1JNL2	**341P2180**	**2995**	**482740**	1.6	-	470	6	202
	4	600	2	10	-	-25	80	NBR	7341PAG1JN90	**341P2190**	**-**	**483580.01** 3	0.4	-	470	7	7351

Table continued on page 240

Notes:

* See Electrical Parts Group table at end of section
1. Manual override standard
2. Operates with low temperatures down to -40 deg. C
3. Other coil-housing available: 488650.01, 488660.01, 4888670.01 (refer to electrical parts at end of this section)

Solenoid valves for actuator control - 5/2 valves - Pipe connection-Spool design

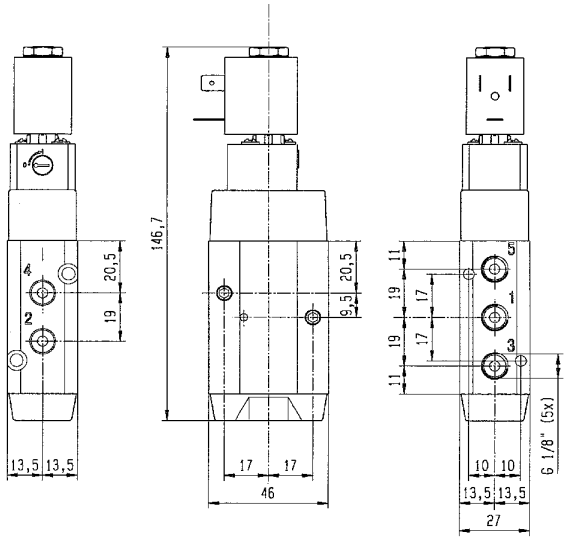

Dimension reference 201

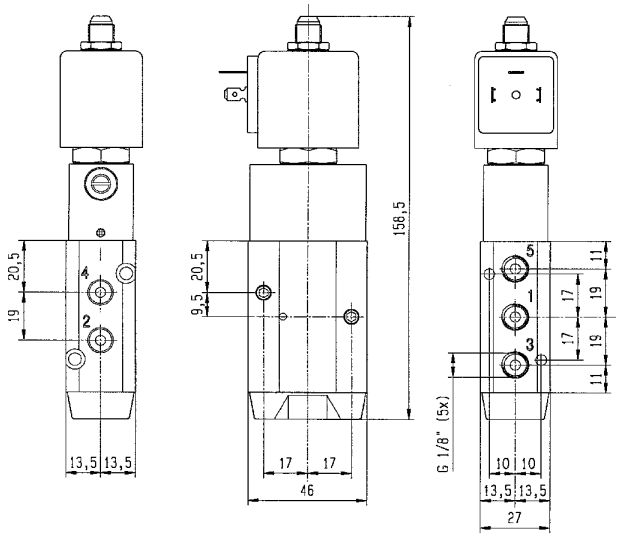

Dimension reference 202

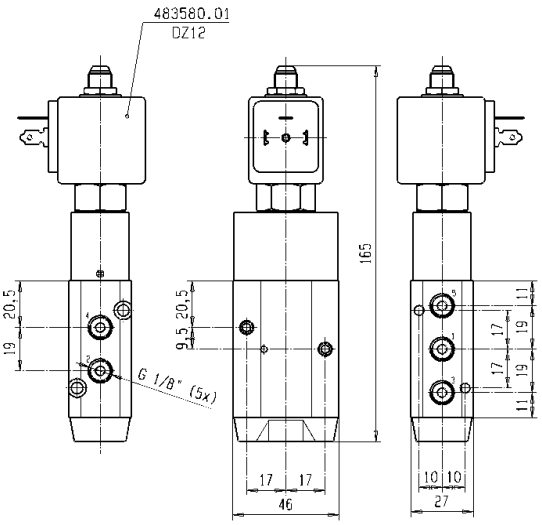

Dimension reference 7351

Solenoid valves for actuator control - 5/2 valves - Pipe connection-Spool design

Port size G	Orifice (mm)	Flow factors (L/min) Qn	Admissible differential pressure bar Min	Max DC	Max AC	Fluid temp. °C Min	Fluid temp. °C Max	Seat disc	Reference numbers: Global valve reference	Reference numbers: Valve reference no.	Reference numbers: Housing	Reference numbers: OR Coil	Power consumption (W) DC	Power consumption (W) AC	Wt. (g)	El. Part Group *	Dim ref.

Pilot operated

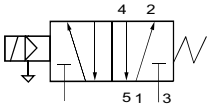

Anod. aluminium body/Pipe mounting - Spool design

1/8	4	600	2	10	10	-25	65	NBR	7341PAG1JN1D	**341P21001D**	**-**	**483250**	8	8	1450	5	7636

Two solenoids and main pressure supply - Integrated pilot

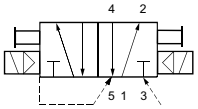

Anod. aluminium body/Pipe mounting - Spool design

1/8	4	400	2	10	10	-25	80	NBR	2347PAG1HNM0	**347P01**	**8993**	**488980** 1	2.5	2	460	1	207

Two solenoids and main pressure supply

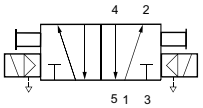

Anod. aluminium body/Pipe mounting - Spool design

1/8	4	400	2	10	10	-25	80	NBR	7347PAG1HNM0	**347P21**	**2995**	**481865** 1	9	8	500	2	206
	4	400	2	10	10	-25	80	NBR			**4270**	**481000** 1	8	8	720	2	

Two solenoids and main pressure supply

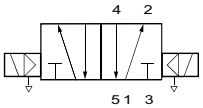

Anod. aluminium body/Pipe mounting - Spool design

1/8	4	400	2	10	-	-25	80	NBR	7347PAG1HN90	**347P2190**	**-**	**483580.01** 2	0.4	-	720	7	206

Table continued on page 242

Notes:

* See Electrical Parts Group table at end of section

1. Please order two housings and coils for each valve
2. Other coil-housing available: 488650.01, 488660.01, 4888670.01 (refer to electrical parts at end of this section)

Solenoid valves for actuator control - 5/2 valves - Pipe connection-Spool design

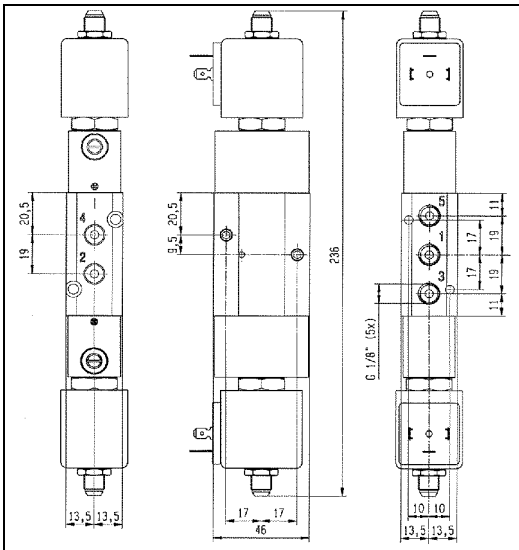

Dimension reference 206

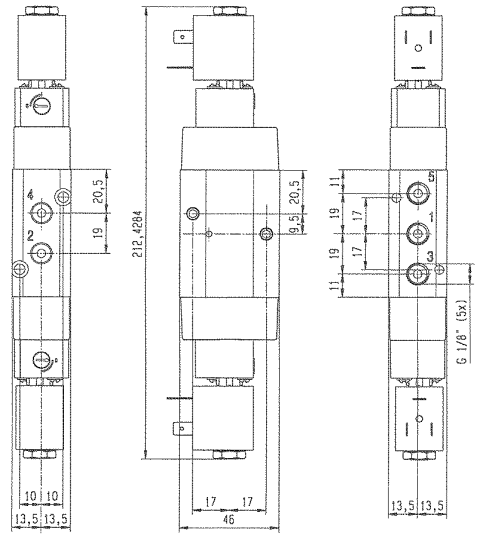

Dimension reference 207

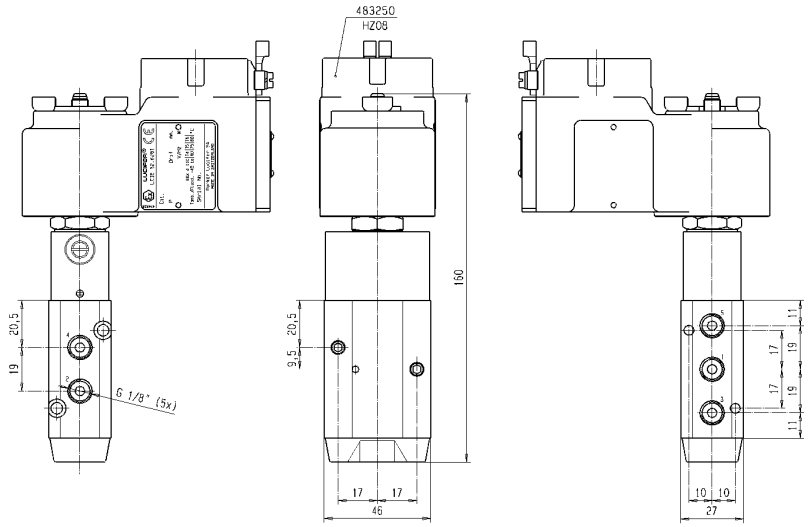

Dimension reference 7636

Solenoid valves for actuator control - 5/2 valves - Pipe connection-Spool design

Port size	Orifice (mm)	Flow factors (L/min)	Admissible differential pressure bar			Fluid temp. °C		Seat disc	Reference numbers			OR	Power consumption (W)		Wt. (g)	El. Part Group *	Dim ref.
			Min	Max		Min	Max		Global valve reference	Valve reference no.	Housing	Coil	DC	AC			
G		Qn		DC	AC												
Pilot operated with external pressure supply																	
Anod. aluminium body/Pipe mounting - Spool design																	
1/8	4	600	2	10	10	-40	65	NBR	7441PAG1JPM0	**441P2108** 1	**2995**	**481865**	9	8	360	2	204
	4	600	2	10	10	-40	65	NBR			**4270**	**481000**	8	8	470	2	
Impulse coil																	
Anod. aluminium body/NAMUR interface - Spool design																	
1/8	4	600	2	-	10	-25	80	NBR	7345PAG1JNM0	**345P21**	**-**	**484990**	-	11	330	4	202
	4	600	2	10	-	-25	80	NBR			**-**	**485400**	13	-	330	4	
Pilot operated - Integrated pilot																	
Anod. aluminium body/Pipe mounting - Spool design																	
1/4	8	1400	2	10	10	-25	80	NBR	2341PAG2HNM0	**341P02**	**8993**	**488980**	2.5	2	380	1	224

Table continued on page 244

Notes:

* See Electrical Parts Group table at end of section

1. Operates with low temperatures down to -40 deg. C

Solenoid valves for actuator control - 5/2 valves - Pipe connection-Spool design

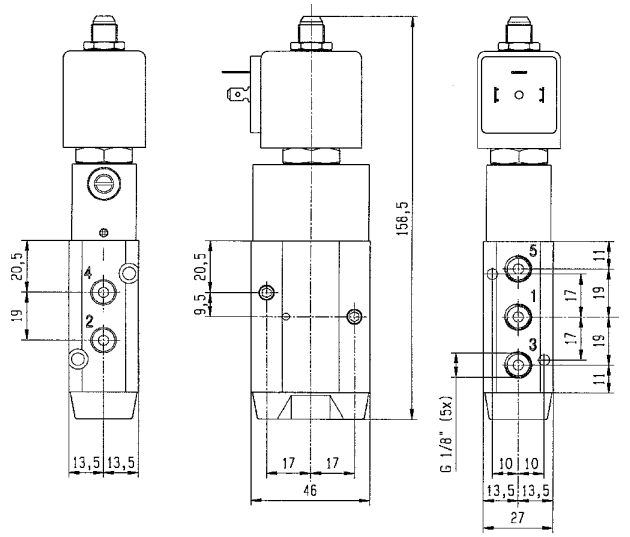

Dimension reference 202

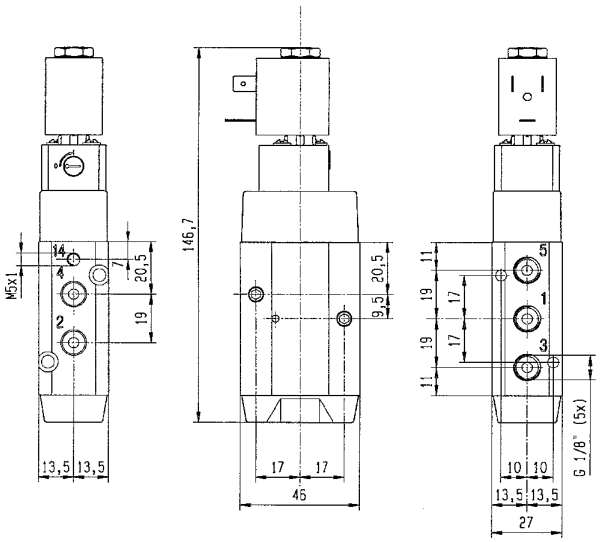

Dimension reference 204

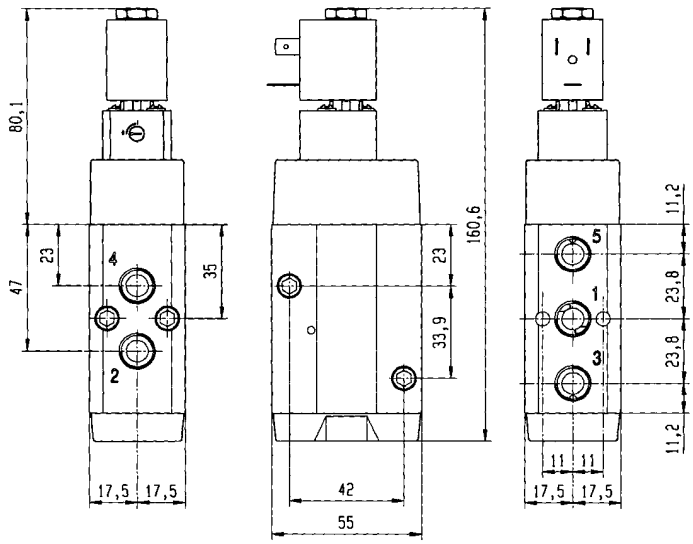

Dimension reference 224

Solenoid valves for actuator control - 5/2 valves - Pipe connection-Spool design

Port size G	Orifice (mm)	Flow factors (L/min) Qn	Admissible differential pressure bar Min	Max DC	Max AC	Fluid temp. °C Min	Fluid temp. °C Max	Seat disc	Reference numbers: Global valve reference	Valve reference no.	Housing	OR Coil	Power consumption (W) DC	Power consumption (W) AC	Wt. (g)	El. Part Group *	Dim ref.

External pressure supply

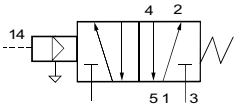

Anod. aluminium body/NAMUR interface - Spool design

1/8	4	600	2	10	10	-40	65	PUR	7541PAG1JP00	**541P0108** 1	-	-	-	-	270	-	205

Pilot operated

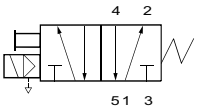

Anod. aluminium body/Pipe mounting - Spool design

1/4	8	1400	2	10	10	-25	80	NBR	7341PAG2PNM0	**341P22**	**2995**	**481865**	9	8	450	2	218
	8	1400	2	10	10	-25	80	NBR			**4270**	**481000**	8	8	560	2	
	8	1400	2	10	-	-25	80	NBR	7341PAG2PNL2	**341P2280**	**2995**	**482740**	1.6	-	450	6	218
	8	1400	2	10	-	-25	80	NBR			-	**491117**	2.5	-	810	6	

Pilot operated

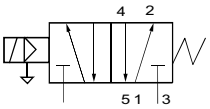

Anod. aluminium body/Pipe mounting - Spool design

1/4	8	1400	2	10	-	-25	80	NBR	7341PAG2PN90	**341P2290**	-	**483580.01** 2	0.4	-	560	7	218

Table continued on page 246

Notes:

* See Electrical Parts Group table at end of section

1. Operates with low temperatures down to -40 deg. C
2. Other coil-housing available: 488650.01, 488660.01, 4888670.01 (refer to electrical parts at end of this section)

Solenoid valves for actuator control - 5/2 valves - Pipe connection-Spool design

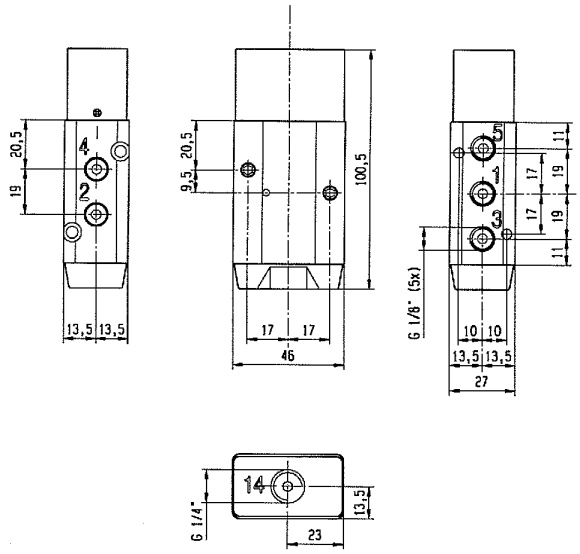

Dimension reference 205

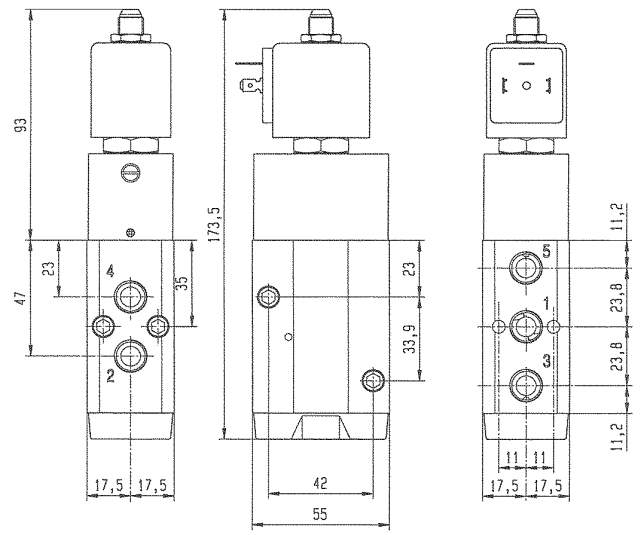

Dimension reference 218

Solenoid valves for actuator control - 5/2 valves - Pipe connection-Spool design

Port size G	Orifice (mm)	Flow factors (L/min) Qn	Admissible differential pressure bar Min	Max DC	Max AC	Fluid temp. °C Min	Fluid temp. °C Max	Seat disc	Reference numbers: Global valve reference	Reference numbers: Valve reference no.	Reference numbers: Housing	OR Coil	Power consumption (W) DC	Power consumption (W) AC	Wt. (g)	El. Part Group *	Dim ref.

Pilot operated

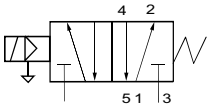

Anod. aluminium body/Pipe mounting - Spool design

1/4	8	1400	2	10	10	-25	80	NBR	7341PAG2PN1D	**341P22001D**	**-**	**483250**	8	8	1450	5	7755

Two solenoids and main pressure supply - Integrated pilot

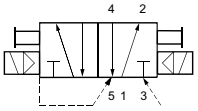

Anod. aluminium body/Pipe mounting - Spool design

1/4	8	1400	2	10	10	-25	80	NBR	2347PAG2PNM0	**347P02**	**8993**	**488980** 1	2.5	2	450	1	225

Two solenoids and main pressure supply

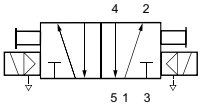

Anod. aluminium body/Pipe mounting - Spool design

1/4	8	1400	2	10	10	-25	80	NBR	7347PAG2PNM0	**347P22**	**2995**	**481865** 1	9	8	590	2	219
	8	1400	2	10	10	-25	80	NBR			**4270**	**481000** 1	8	8	810	2	

Notes:

* See Electrical Parts Group table at end of section

1. Please order two housings and coils for each valve

Solenoid valves for actuator control - 5/2 valves - Pipe connection-Spool design

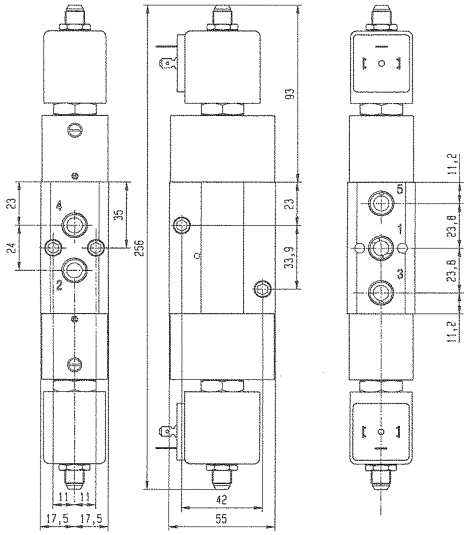

Dimension reference 219

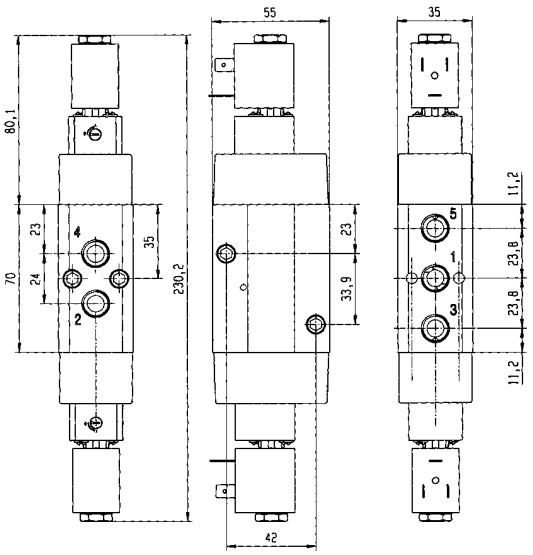

Dimension reference 225

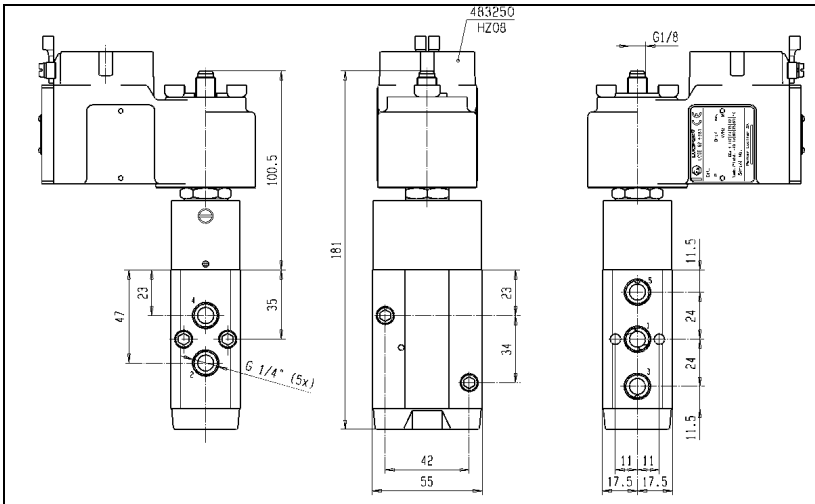

Dimension reference 7755

Solenoid valves for actuator control

5/2

Applications

3- or 4-way directional valves for control of single - or double acting pneumatic actuators.

Port size G	Orifice (mm)	Flow factors (L/min) Qn	Admissible differential pressure bar Min	Max DC	Max AC	Fluid temp. °C Min	Fluid temp. °C Max	Seat disc	Reference numbers: Global valve reference	Reference numbers: Valve reference no.	Reference numbers: Housing	Reference numbers: Coil	Power consumption (W) DC	Power consumption (W) AC	Wt. (g)	El. Part Group *	Dim ref.
Pilot operated																	
Aluminium alloy and brass body/Pipe mounting - Poppet design																	
1/8	4	400	1	10	10	-10	75	NBR	-	**341L9101**	**8993**	**488980**	2.5	2	270	1	42

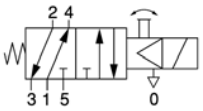

Table continued on page 250

Notes:

* See Electrical Parts Group table at end of section

Solenoid valves for actuator control - 5/2 valves - Pipe connection-Poppet design

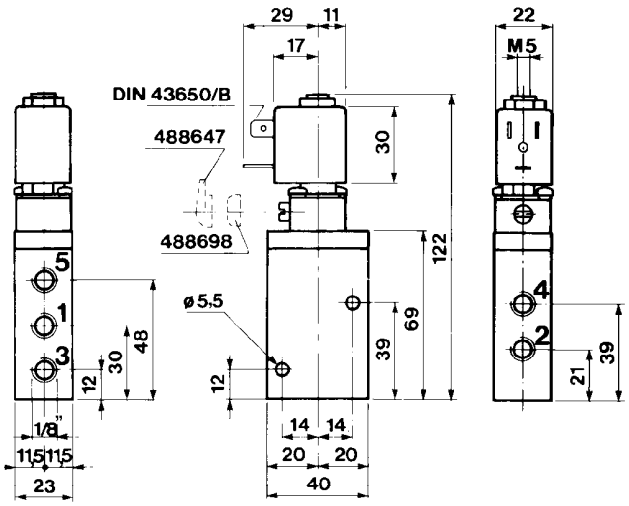

Dimension reference 42

Solenoid valves for actuator control - 5/2 valves - Pipe connection-Poppet design

Port size	Orifice (mm)	Flow factors (L/min)	Admissible differential pressure bar			Fluid temp. °C		Seat disc	Reference numbers			OR	Power consumption (W)		Wt. (g)	El. Part Group *	Dim ref.
			Min	Max		Min	Max		Global valve reference	Valve reference no.	Housing	Coil	DC	AC			
G		Qn		DC	AC												
											Pilot operated						

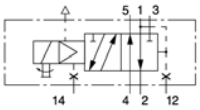

Die-cast zinc body/Pipe mounting - Poppet design

1/4	8	1400	1	10	10	-10	75	NBR	-	**341L11**	**8993**	**488980**	2.5	2	690	1	118

Table continued on page 252

Notes:

* See Electrical Parts Group table at end of section

Solenoid valves for actuator control - 5/2 valves - Pipe connection-Poppet design

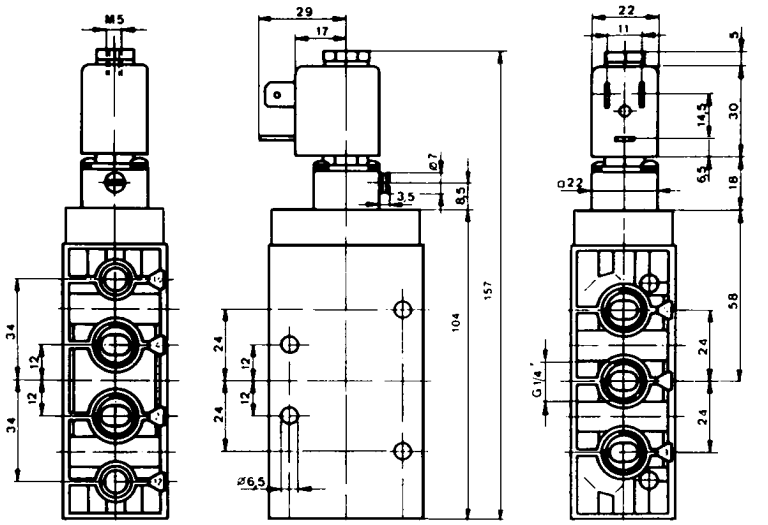

Dimension reference 118

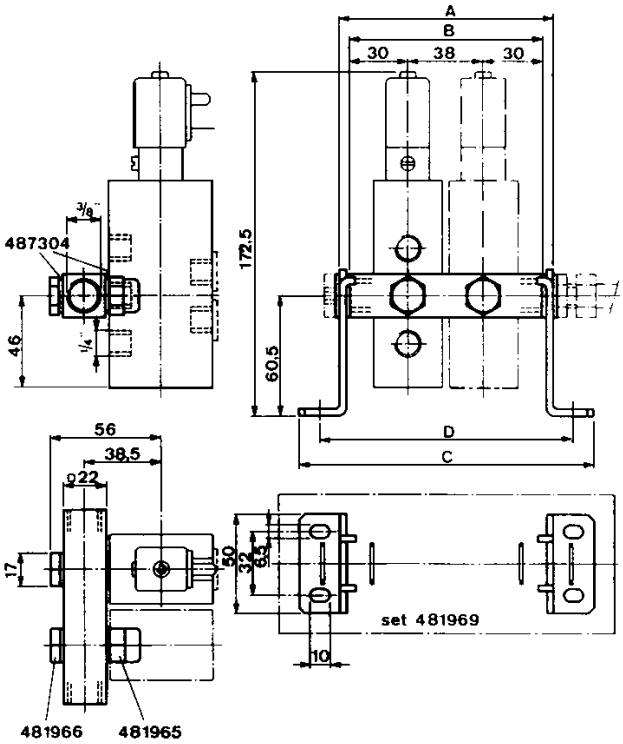

Quantity of valves by assembly	Feeder Ref.	A mm	B mm	C mm	D mm	Sealing 487304	Screw 481966	Set No. 481969
2	481964.02	108	98	149	128	4	2	1
3	481964.03	146	136	187	166	6	3	1
4	481964.04	184	174	225	204	8	4	1
5	481964.05	222	212	263	242	10	5	1
6	481964.06	260	250	301	280	12	6	1
7	481964.07	298	288	339	318	14	7	1
8	481964.08	336	326	377	356	16	8	1
9	481964.09	374	364	415	394	18	9	1
10	481964.10	412	402	453	432	20	10	1

Associated sub-base diagram

Solenoid valves for actuator control - 5/2 valves - Pipe connection-Poppet design

Port size	Orifice (mm)	Flow factors (L/min)	Admissible differential pressure bar			Fluid temp. °C		Seat disc	Reference numbers			OR	Power consumption (W)		Wt. (g)	El. Part Group *	Dim ref.
			Min	Max													
G		Qn		DC	AC	Min	Max		Global valve reference	Valve reference no.	Housing	Coil	DC	AC			
Two solenoids and main pressure supply																	

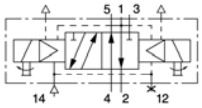

Die-cast zinc body/Pipe mounting - Poppet design

1/4	8	1400	1	10	10	-10	75	NBR	-	**347L11**	**8993**	**488980** [1]	2.5	2	750	1	46

Table continued on page 254

Notes:

* See Electrical Parts Group table at end of section

1. Please order two housings and coils for each valve

Solenoid valves for actuator control - 5/2 valves - Pipe connection-Poppet design

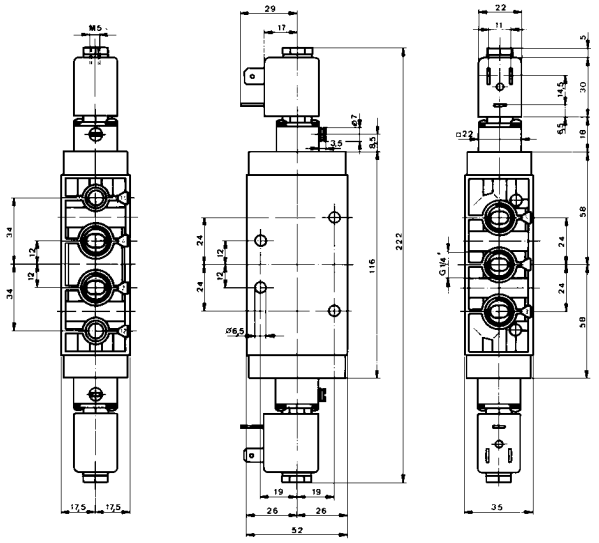

Dimension reference 46

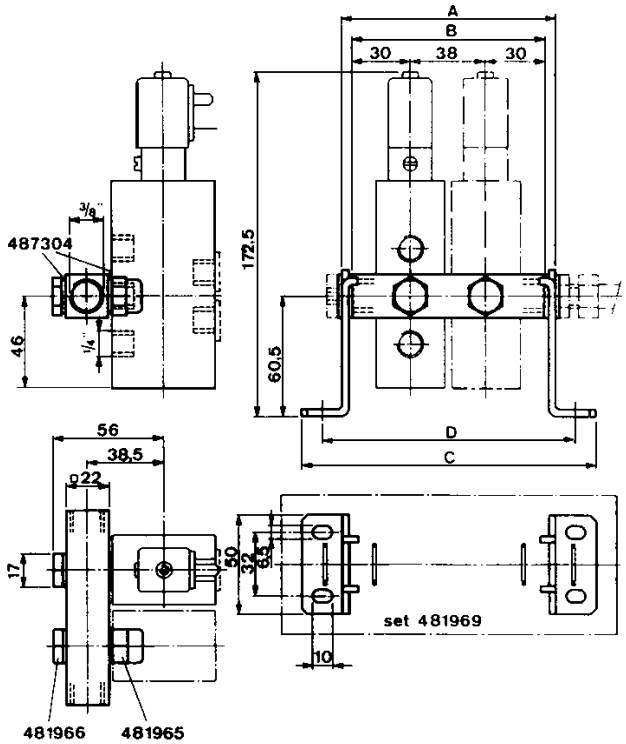

Quantity of valves by assembly	Feeder Ref.	A mm	B mm	C mm	D mm	Sealing 487304	Screw 481966	Set No. 481969
2	481964.02	108	98	149	128	4	2	1
3	481964.03	146	136	187	166	6	3	1
4	481964.04	184	174	225	204	8	4	1
5	481964.05	222	212	263	242	10	5	1
6	481964.06	260	250	301	280	12	6	1
7	481964.07	298	288	339	318	14	7	1
8	481964.08	336	326	377	356	16	8	1
9	481964.09	374	364	415	394	18	9	1
10	481964.10	412	402	453	432	20	10	1

Associated sub-base diagram

Solenoid valves for actuator control - 5/2 valves - Pipe connection-Poppet design

Port size	Orifice (mm)	Flow factors (L/min)	Admissible differential pressure bar			Fluid temp. °C		Seat disc	Reference numbers			OR	Power consumption (W)		Wt. (g)	El. Part Group *	Dim ref.
			Min	Max		Min	Max										
G		Qn		DC	AC				Global valve reference	Valve reference no.	Housing	Coil	DC	AC			

Two solenoids and main pressure supply

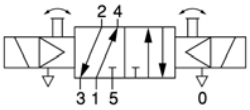

Aluminium alloy and brass body/Pipe mounting - Poppet design

1/8	4	315	2	10	10	-10	75	NBR	-	**347L9101**	**8993**	**488980** [1]	2.5	2	430	1	117

Pilot operated

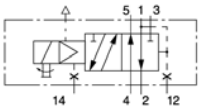

Die-cast zinc body/Pipe mounting - Poppet design

1/4	8	1400	1	10	10	-10	75	NBR	7341LMG2NNM0	**E341L1130**	**2995**	**481865**	9	8	-	2	3539
	8	1400	1	10	10	-10	75	NBR	7341LMG2NNM0		**4270**	**481000**	8	8	-	2	3539
	8	1400	1	10	10	-10	75	NBR	-	**341L1190**	**-**	**483580.01** [2]	0.4	-	690	7	7478

Notes:

* See Electrical Parts Group table at end of section

1. Please order two of these items per valve
2. Other coil-housing available: 488650.01, 488660.01, 4888670.01 (refer to electrical parts at end of this section)

Solenoid valves for actuator control - 5/2 valves - Pipe connection-Poppet design

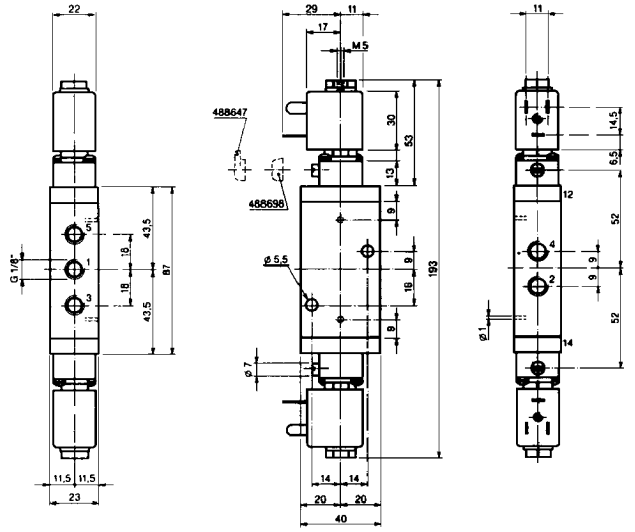

Dimension reference 117

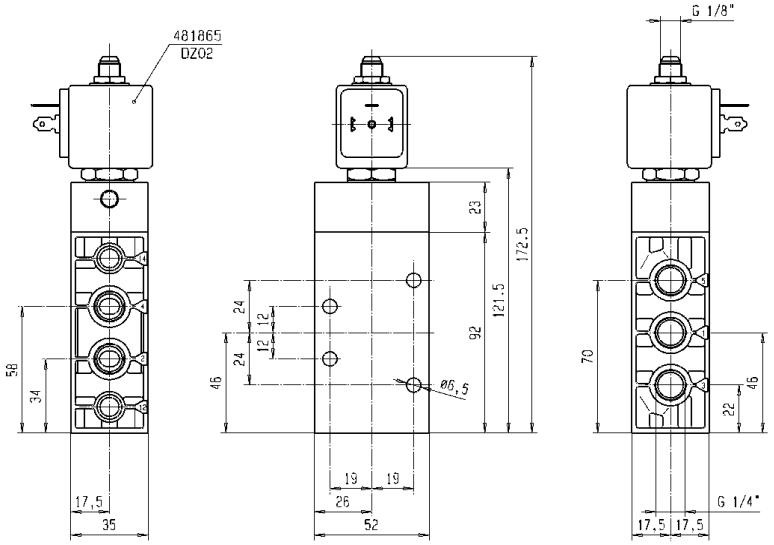

Dimension reference 3539

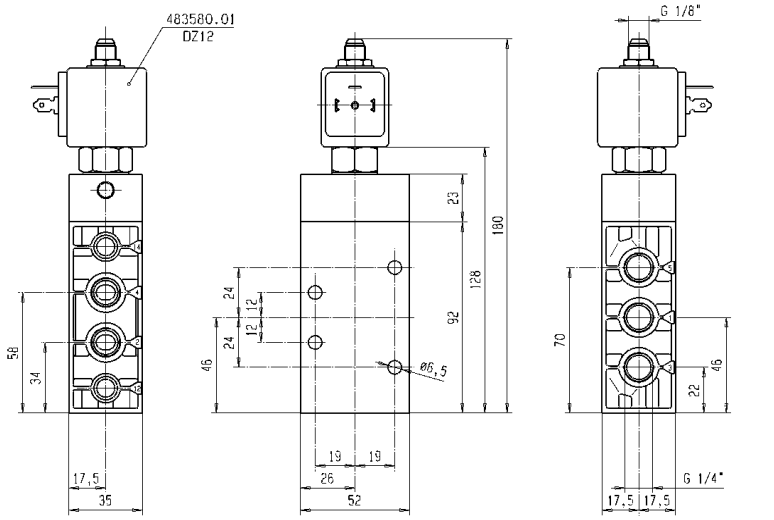

Dimension reference 7478

Solenoid valves for actuator control – NAMUR interface

ACTUATION	CONNECTION	ORIFICE (MM)	MAX. PRESSURE (BAR) <KPA>	PAGE
Pilot operated	1/4	8	10.0	264/266
	1/4 - 1/8	4	10.0	258/260/270
Pilot operated - Integrated pilot	1/4	8	10.0	264
	1/4 - 1/8	4	10.0	258
Two solenoids and main pressure supply	1/4	8	10.0	268
	1/4 - 1/8	4	10.0	262
Two solenoids and main pressure supply - Integrated pilot	1/4	8	10.0	268
	1/4 - 1/8	4	10.0	262
Solenoid and external pressure supply	1/4 - 1/8	4	10.0	260
External pressure supply	1/4 - 1/8	4	10.0	262

Notes:

Solenoid valves for actuator control

3/2
5/2

Applications

3- or 4-way directional valves for control of single - or double acting pneumatic actuators.

A patented sealing plate is incorporated to the body - providing on-site conversion of the valve from 5/2 to the 3/2 function (or vice versa) by simply rotating the plate through 180°. In the 3/2 function it provides venting of spring chambers to prevent corrosion which normally occurs when environmental air penetrates into the actuator.

The interface design corresponds to the German NAMUR standard and the VDI/VDE 3845 recommendations of the actuator industry and permits a compact design of the actuator/valve unit.

Port size	Orifice (mm)	Flow factors (L/min)	Admissible differential pressure bar			Fluid temp. °C		Seat disc	Reference numbers				Power consumption (W)		Wt. (g)	El. Part Group *	Dim ref.
			Min	Max		Min	Max		Global valve reference	Valve reference no.	Housing	OR Coil	DC	AC			
G		Qn		DC	AC												
Pilot operated - Integrated pilot																	
Anod. aluminium body/NAMUR interface - Spool design																	
1/4 - 1/8	4	600	2	10	10	-25	80	NBR	2341NAKBJNM1	**341N01** 1	**8993**	**488980**	2.5	2	320	1	209
	4	600	2	10	10	-25	80	NBR	2341NAKBJNM0	**341N11**	**8993**	**488980**	2.5	2	320	1	208
Pilot operated																	
Anod. aluminium body/NAMUR interface - Spool design																	
1/4 - 1/8	4	600	2	10	10	-25	80	NBR	7341NAKBJNM1	**341N21**	**2995**	**481865**	9	8	390	2	210
	4	600	2	10	10	-25	80	NBR			**4270**	**481000**	8	8	500	2	

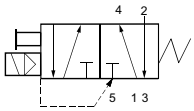

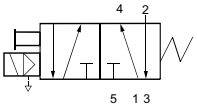

Table continued on page 260

Notes:

* See Electrical Parts Group table at end of section

1. Manual override standard

Solenoid valves for actuator control - 3/2 or 5/2 valves - NAMUR interface-Spool design

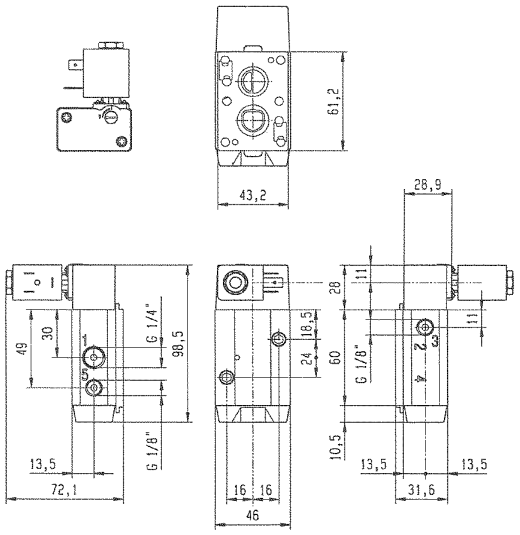

Dimension reference 208

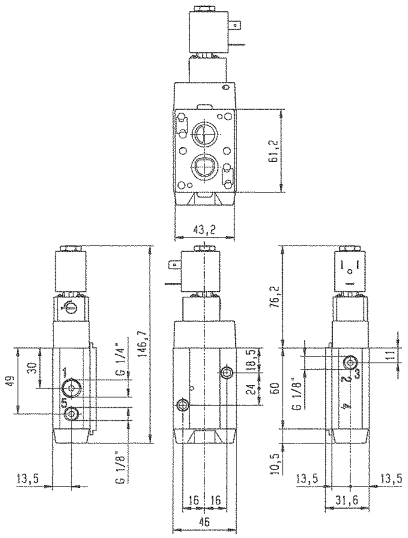

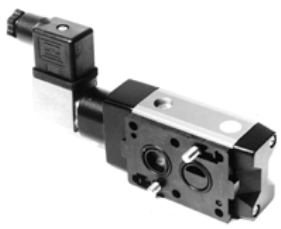

Dimension reference 209

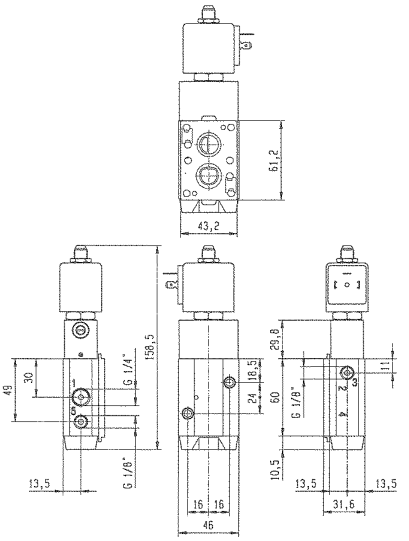

Dimension reference 210

Solenoid valves for actuator control - 3/2 or 5/2 valves - NAMUR interface-Spool design

Port size	Orifice (mm)	Flow factors (L/min)	Admissible differential pressure bar			Fluid temp. °C		Seat disc	Reference numbers			OR	Power consumption (W)		Wt. (g)	El. Part Group *	Dim ref.
			Min	Max		Min	Max		Global valve reference	Valve reference no.	Housing	Coil	DC	AC			
G		Qn		DC	AC												

Pilot operated

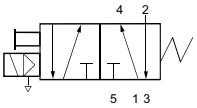

Anod. aluminium body/NAMUR interface - Spool design

1/4 - 1/8	4	600	2	10	10	-25	80	NBR	7341NAKBJNM0	**341N31**	**2995**	**481865**	9	8	510	2	211
	4	600	2	10	10	-25	80	NBR			**4270**	**481000**	8	8	620	2	
	4	600	2	10	10	-40	65	NBR	7341NAKBJPM0	**341N3108** 1	**2995**	**481865**	9	8	510	2	211
	4	600	2	10	10	-40	65	NBR			**4270**	**481000**	8	8	620	2	
	4	600	2	10	-	-25	80	NBR	7341NAKBJNL2	**341N3180**	**2995**	**482740**	1.6	-	510	6	211

Pilot operated

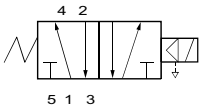

Anod. aluminium body/NAMUR interface - Spool design

1/4 - 1/8	4	400	2	10	10	-25	80	NBR	7341NAKBHN90	**341N3190**	-	**483580.01** 2	0.4	-	640	7	211

Pilot operated

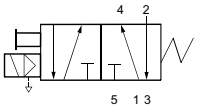

Anod. aluminium body/NAMUR interface - Spool design

1/4 - 1/8	4	600	2	10	10	-25	80	NBR	7341NAKBJN1D	**341N31001D**	-	**483250**	8	8	1520	5	7753
	4	600	2	10	10	-40	65	NBR	7341NAKBJP1D	**341N31081D**	-	**483250**	8	8	1520	5	7753

Solenoid and external pressure supply

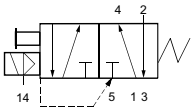

Anod. aluminium body/NAMUR interface - Spool design

1/4 - 1/8	4	600	2	10	10	-40	65	NBR	7441NAKBJPM0	**441N3108** 1	**2995**	**481865**	9	8	510	2	211
	4	600	2	10	10	-40	65	NBR			**4270**	**481000**	8	8	620	2	

Table continued on page 262

Notes:

* See Electrical Parts Group table at end of section

1. Operates with low temperatures down to -40 deg. C
2. Other coil-housing available: 488650.01, 488660.01, 4888670.01 (refer to electrical parts at end of this section)

Solenoid valves for actuator control - 3/2 or 5/2 valves - NAMUR interface-Spool design

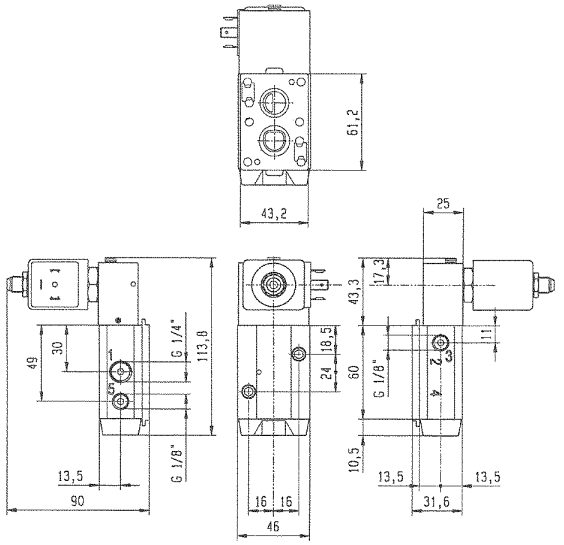

Dimension reference 211

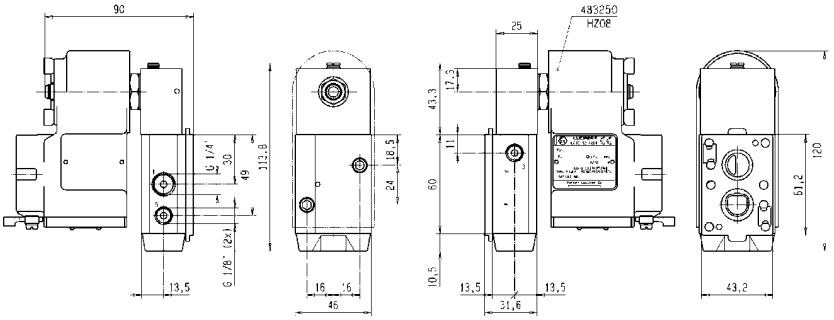

Dimension reference 7753

Solenoid valves for actuator control - 3/2 or 5/2 valves - NAMUR interface-Spool design

Port size	Orifice (mm)	Flow factors (L/min)	Admissible differential pressure bar			Fluid temp. °C		Seat disc	Reference numbers					Power consumption (W)		Wt. (g)	El. Part Group *	Dim ref.
			Min	Max								OR						
									Global valve reference	Valve reference no.	Housing	Coil						
G		Qn		DC	AC	Min	Max							DC	AC			

Two solenoids and main pressure supply - Integrated pilot

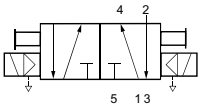

Anod. aluminium body/NAMUR interface - Spool design

1/4 - 1/8	4	400	2	10	10	-25	80	NBR	2347NAKBHNM0	**347N11**	**8993**	**488980** 1	2.5	2	530	1	213

Two solenoids and main pressure supply

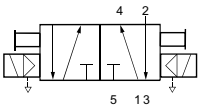

Anod. aluminium body/NAMUR interface - Spool design

1/4 - 1/8	4	400	2	10	10	-25	80	NBR	7347NAKBHNM0	**347N31**	**2995**	**481865** 1	9	8	670	2	216
	4	400	2	10	10	-25	80	NBR			**4270**	**481000** 1	8	8	890	2	

External pressure supply

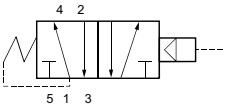

Anod. aluminium body/NAMUR interface - Spool design

1/4 - 1/8	4	600	2	10	10	-25	80	FKM	7541NAKBJN00	**541N01**	-	-	-	-	300	-	214
	4	600	2	10	10	-40	65	NBR	7541NAKBJN00	**541N0108** 2	-	-	-	-	300	-	214

Table continued on page 264

Notes:

* See Electrical Parts Group table at end of section

1. Please order two housings and coils for each valve
2. Operates with low temperatures down to -40 deg. C

Solenoid valves for actuator control - 3/2 or 5/2 valves - NAMUR interface-Spool design

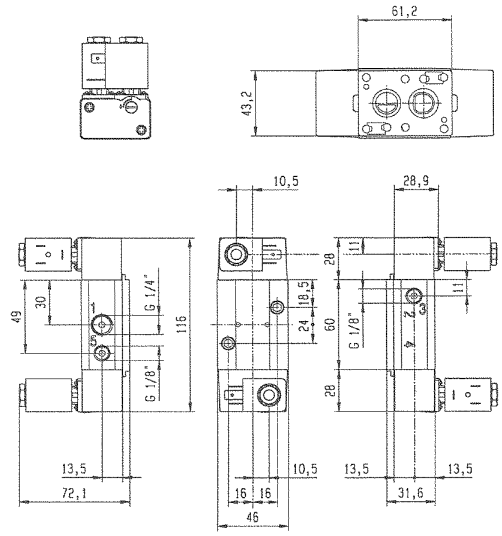

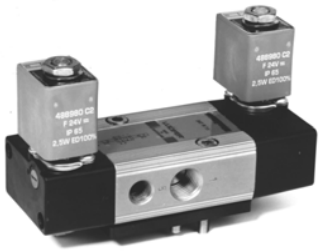

Dimension reference 213

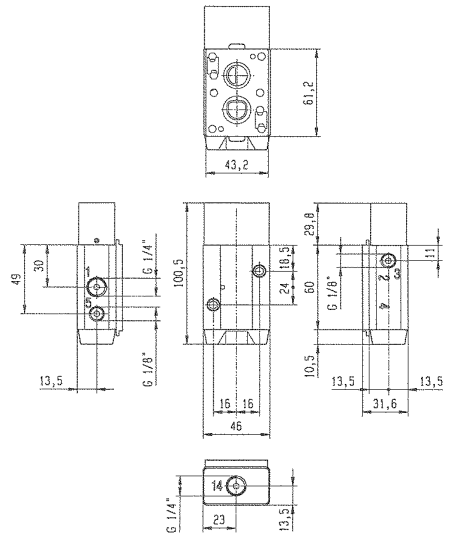

Dimension reference 214

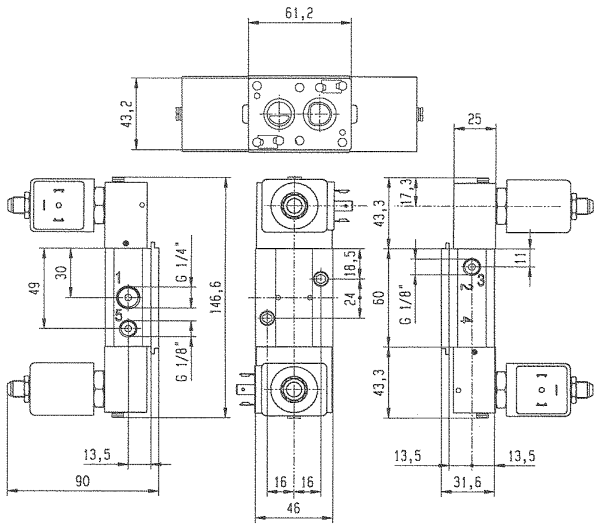

Dimension reference 216

Solenoid valves for actuator control - 3/2 or 5/2 valves - NAMUR interface-Spool design

Port size	Orifice (mm)	Flow factors (L/min)	Admissible differential pressure bar			Fluid temp. °C		Seat disc	Reference numbers			OR	Power consumption (W)		Wt. (g)	El. Part Group *	Dim ref.
			Min	Max													
G		Qn		DC	AC	Min	Max		Global valve reference	Valve reference no.	Housing	Coil	DC	AC			

Pilot operated - Integrated pilot

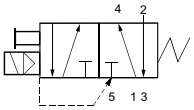

Anod. aluminium body/NAMUR interface - Spool design

1/4	8	1400	2	10	10	-25	80	NBR	2341NAKBPNM1	**341N02**	**8993**	**488980**	2.5	2	470	1	220
	8	1400	2	10	10	-25	80	NBR	2341NAKBNNM0	**341N12**	**8993**	**488980**	2.5	2	470	1	221

Pilot operated

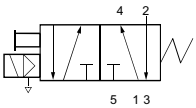

Anod. aluminium body/NAMUR interface - Spool design

1/4	8	1400	2	10	10	-25	80	NBR	7341NAKBPNM1	**341N22**	**2995**	**481865**	9	8	690	2	222
	8	1400	2	10	10	-25	80	NBR			**4270**	**481000**	8	8	800	2	

Table continued on page 266

Notes:

* See Electrical Parts Group table at end of section

Solenoid valves for actuator control - 3/2 or 5/2 valves - NAMUR interface-Spool design

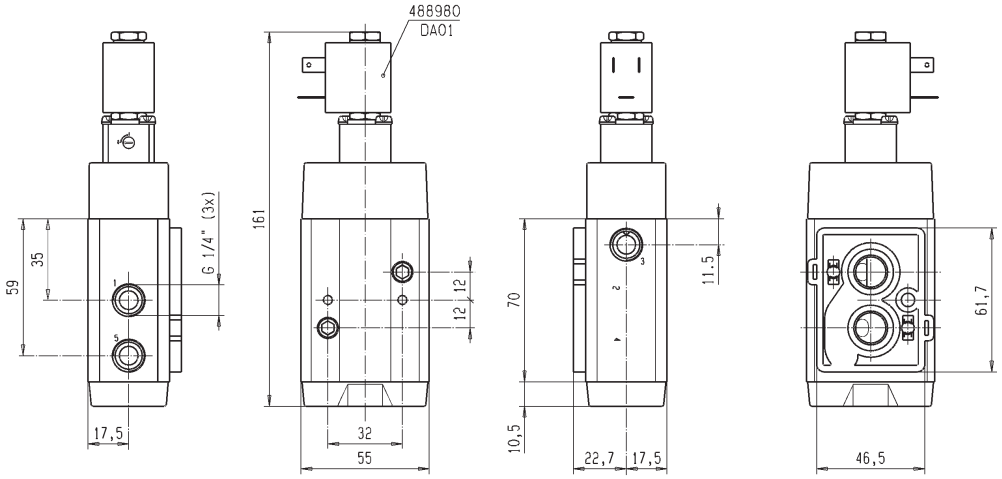

Dimension reference 220

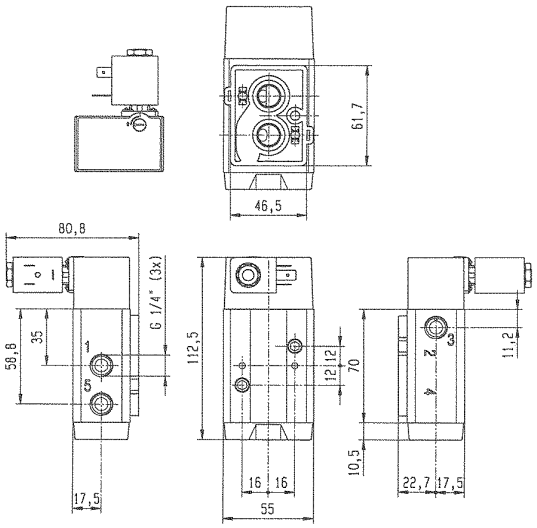

Dimension reference 221

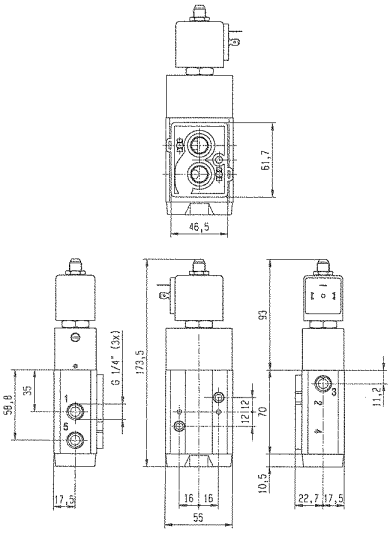

Dimension reference 222

Solenoid valves for actuator control - 3/2 or 5/2 valves - NAMUR interface-Spool design

Port size	Orifice (mm)	Flow factors (L/min)	Admissible differential pressure bar			Fluid temp. °C		Seat disc	Reference numbers			OR	Power consumption (W)		Wt. (g)	El. Part Group *	Dim ref.
			Min	Max													
G		Qn		DC	AC	Min	Max		Global valve reference	Valve reference no.	Housing	Coil	DC	AC			

Pilot operated

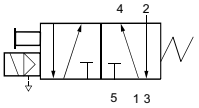

Anod. aluminium body/NAMUR interface - Spool design

1/4	8	1400	2	10	10	-25	80	NBR	7341NAKBPNM0	**341N32**	**2995**	**481865**	9	8	740	2	223
	8	1400	2	10	10	-25	80	NBR			**4270**	**481000**	8	8	850	2	
	8	1400	2	10	-	-25	80	FKM	7341NAKBPNL2	**341N3280**	**2995**	**482740**	1.6	-	740	6	223
	8	1400	2	10	-	-25	80	FKM			**-**	**491117**	2.5	-	740	6	

Pilot operated

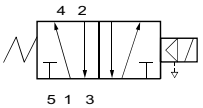

Anod. aluminium body/NAMUR interface - Spool design

1/4	8	1400	2	10	-	-25	80	NBR	7341NAKBPN90	**341N3290**	**-**	**483580.01** [1]	0.4	-	850	7	223
	8	1400	2	10	10	-25	80	NBR	7341NAKBPN1D	**341N32001D**	**-**	**483250**	8	8	1730	5	7754

Table continued on page 268

Notes:

* See Electrical Parts Group table at end of section

1. Other coil-housing available: 488650.01, 488660.01, 4888670.01 (refer to electrical parts at end of this section)

Solenoid valves for actuator control - 3/2 or 5/2 valves - NAMUR interface-Spool design

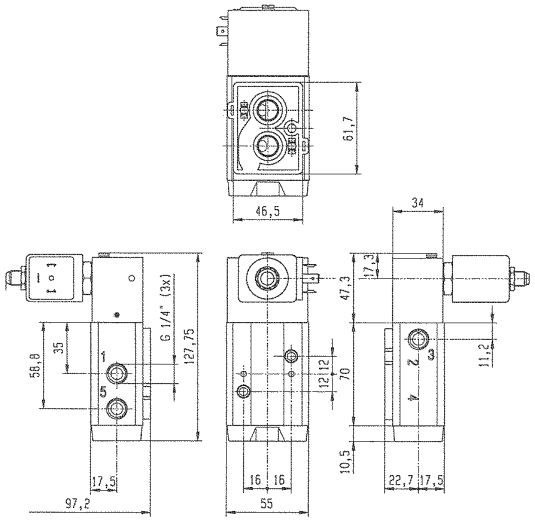

Dimension reference 223

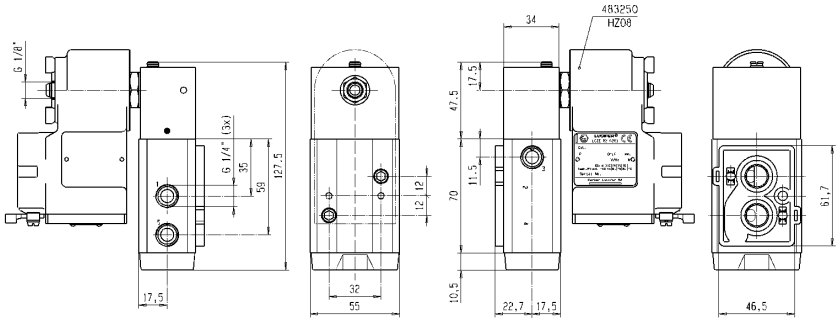

Dimension reference 7754

Solenoid valves for actuator control - 3/2 or 5/2 valves - NAMUR interface-Spool design

Port size	Orifice (mm)	Flow factors (L/min)	Admissible differential pressure bar			Fluid temp. °C		Seat disc	Reference numbers					Power consumption (W)		Wt. (g)	El. Part Group *	Dim ref.
			Min	Max								OR						
G		Qn		DC	AC	Min	Max		Global valve reference	Valve reference no.	Housing	Coil		DC	AC			

Two solenoids and main pressure supply - Integrated pilot

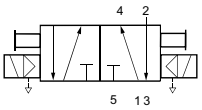

Anod. aluminium body/NAMUR interface - Spool design

1/4	8	1400	2	10	10	-25	80	NBR	2347NAKBPNM0	**347N12**	**8993**	**488980**	1	2.5	2	640	1	7315

Two solenoids and main pressure supply

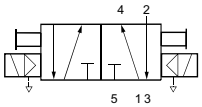

Anod. aluminium body/NAMUR interface - Spool design

1/4	8	1400	2	10	10	-25	80	NBR	7347NAKBPNM0	**347N32**	**2995**	**481865**	1	9	8	770	2	7320
	8	1400	2	10	10	-25	80	NBR			**4270**	**481000**	1	8	8	980	2	

Notes:

* See Electrical Parts Group table at end of section

1. Please order two housings and coils for each valve

Solenoid valves for actuator control - 3/2 or 5/2 valves - NAMUR interface-Spool design

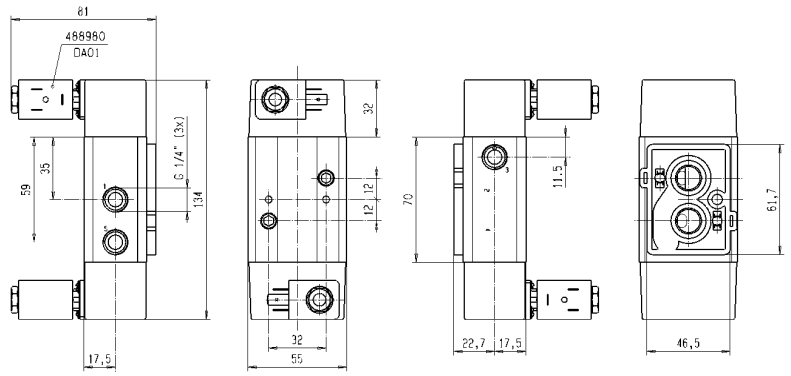

Dimension reference 7315

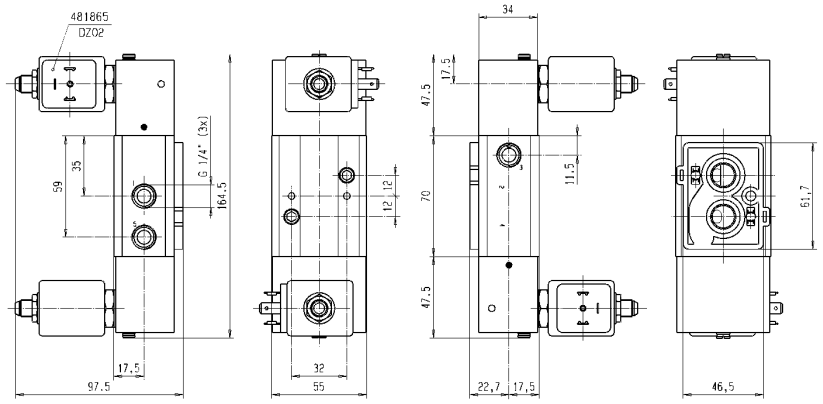

Dimension reference 7320

Solenoid valves for actuator control

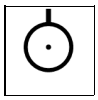

3/2 5/2

Port size G	Orifice (mm)	Flow factors (L/min) Qn	Admissible differential pressure bar Min	Max DC	Max AC	Fluid temp. °C Min	Fluid temp. °C Max	Seat disc	Reference numbers: Global valve reference	Reference numbers: Valve reference no.	Reference numbers: Housing	OR Coil	Power consumption (W) DC	Power consumption (W) AC	Wt. (g)	El. Part Group *	Dim ref.

Pilot operated

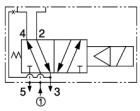

Anod. aluminium body/NAMUR interface - Poppet design

1/4 - 1/8	4	355	1	10	10	-10	75	NBR	-	**341L9504**	**8993**	**488980**	2.5	2	360	1	44
	4	355	1	10	10	-10	75	NBR	7341LAKBGN1D	**341L95341D**	**-**	**483250**	8	8	1470	5	45
	4	355	1	10	10	-10	75	NBR	7341LAKBGNM0	**341L9534**	**2995**	**481865**	9	8	470	2	45
	4	355	1	10	-	-10	75	NBR	7341LAKBGNL2	**341L9584**	**-**	**482740**	1.6	-	470	6	45
	4	355	1	10	-	-10	75	NBR	7341LAKBGN90	**341L9594**	**-**	**483580.01** [1]	0.4	-	470	7	45
	4	355	2	10	-	-25	65	PUR	7341LAPBGPL2	**341L9588**	**-**	**482740**	1.6	-	470	6	45
	4	355	2	10	-	-25	75	PUR	-	**341L9598**	**-**	**483580.01** [1]	0.4	-	470	7	45

Notes:

* See Electrical Parts Group table at end of section

1. Other coil-housing available: 488650.01, 488660.01, 4888670.01 (refer to electrical parts at end of this section)

Solenoid valves for actuator control - 3/2 or 5/2 valves - NAMUR interface-Poppet design

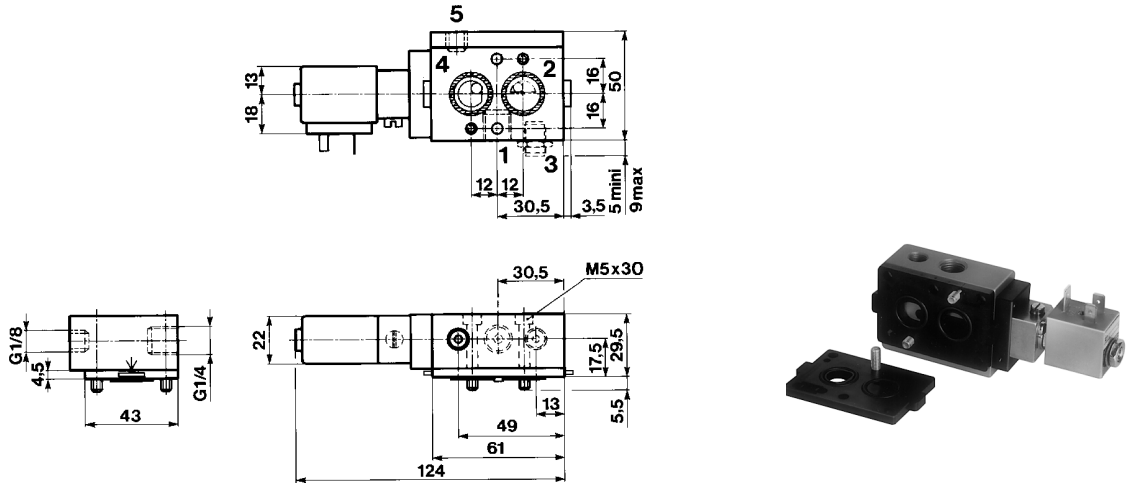

Dimension reference 44

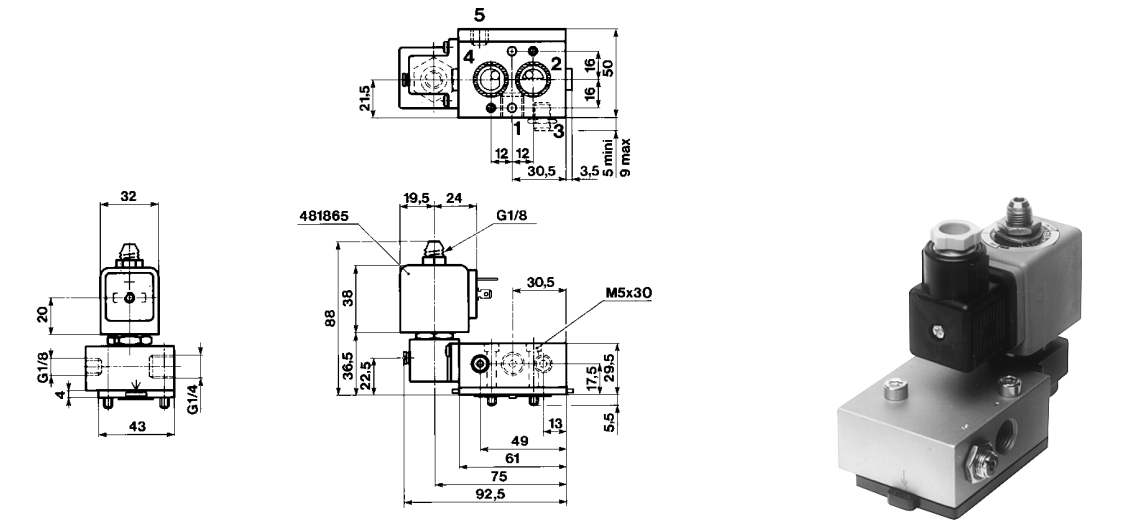

Dimension reference 45

Electrical parts options with 3/2, 5/2 valves for pneumatic actuator control

El.part Group	Coil	Protection class	Protection class / Temperature class	Power DC	Power AC	Coil Order No.	Coil Ref. No.	Connection	Housing Order No.	Housing Ref. No.	Ambient temp. min.	Ambient temp. max.
1	**22 mm**	IP 65	**Class F**	2.5 W	2 W	DA01	**488980**	for DIN plug	A0	**8993**	-40	50
		IP 65	**Class F**	2.5 W	2 W	DA02	**481045**	with DIN plug	A0	**8993**	-40	50
		IP 65	**Class F**	5 W	4 W	DA03	**481180**	for DIN plug	A0	**8993**	-40	50
		IP 65	**Class F**	5 W	4 W	DA04	**481530**	with DIN plug	A0	**8993**	-40	50
		IP 65	**EEx m II T4**	5 W	4 W	VA01	**482605**	with 1500mm cable	00	**-**	-40	50
		IP 65	**EEx m II T5**	2.5 W	2 W	VA02	**482606**	with 1500mm cable	00	**-**	-40	50
2	**32 mm** (Std)	IP 65	**Class F**	9 W	8 W	DZ02	**481865**	for DIN plug	N1	**2995**	-40	50
		IP 65		9 W	8 W	DZ03	**482725**	with DIN plug	N1	**2995**	-40	50
		IP 65	**Class H**	9 W	8 W	DZ04	**482453**	for DIN plug	N1	**2995**	-40	50
		IP 65		9 W	8 W	DZ05	**492726**	with DIN plug	N1	**2995**	-40	50
		IP 65	**Class F, 50/60 Hz**	-	9 W	DZ06	**483510**	for DIN plug	N1	**2995**	-40	50
		IP 65		-	9 W	DZ07	**482635**	with DIN plug	N1	**2995**	-40	50
		IP 65	**EEx m II T4**	9 W	8 W	HZ05	**492670**	with 3000mm cable	00	**-**	-40	40
		IP 65	**Class H**	14 W	14 W	DZ08	**492425**	for DIN plug	N1	**2995**	-40	50
		IP 65		14 W	14 W	DZ09	**492727**	with DIN plug	N1	**2995**	-40	50
	50 mm (Std)	IP10 / IP 44	**Class F**	8 W	8 W	EZ01	**481000**	screw-terminals	E0	**4270**	-40	50
		IP10 / IP 44	**Class H**	8 W	8 W	EZ02	**485100**	screw-terminals	E0	**4270**	-40	50
		IP 67	**Class F, M20x1.5**	8 W	8 W	EZ01	**481000**	screw-terminals	G1	**4538**	-40	50
		IP 65	**EEx m II T5/T4**	9 W	8 W	VZ01	**492070**	with 1500mm cable	00	**-**	-40	40/65
		IP 67	**EEx me II T4**	8 W	8 W	HZ06	**483371**	for cable connection	00	**-**	-40	65
		IP 66	**EEx me II T3/T4**	11 W	9 W	VZ03	**492190**	for cable connection	00	**-**	-40	75/40
3	**32 mm**	IP 65	**Class H**	-	14 W	DZ08	**492425**	for DIN plug	N1	**2995**	-40	50
4	**50 mm**	IP10 / IP 44	**Class F**	-	11 W	MZ01	**484990**	screw-terminals	E1	**4269**	-25	50
	(impulse)	IP10 / IP 44	**Class F**	13 W	-	MZ02	**485400**	screw-terminals	E1	**4269**	-25	50
5	**50 mm**	IP 54	**EEx d IIC T4/T5/T6**	8 W	8 W	HZ08	**483250**	for cable connection, 1/2 NPT	00	**-**	-40	80/75/60
6	**32 mm**	IP 65	**Class F**	1.6 W	-	DZ10	**482740**	for DIN plug	N1	**2995**	-40	50
	(Miniwatt)	IP 65	**Class F**	1.6W	-	DZ11	**482745**	with DIN plug	N1	**2995**	-40	50
	50 mm	IP 67	**EEx me II T5**	2.5 W	-	VZ04	**491117**	for cable connection	00	**-**	-40	65
	(Miniwatt)	IP 67	**EEx m II T5/T4**	2.5 W	2.5 W	VZ05	**492370**	with 1500mm cable	00	**-**	-40	40/65
		IP 66	**EEx me II T6/T5**	2.5 W	2.5 W	VZ06	**492390**	for cable connection	00	**-**	-40	40/75
7	**32 mm**	IP 65	**EEx ia II C T6**	0.4 W	-	DZ12	**483580.01**	for DIN plug	N1	**2995**	-25	55
		IP 65		0.4 W	-	DZ13	**483960.01**	with DIN plug	N1	**2995**	-25	55
	50 mm	IP 66	**EEx ia II C T6**	0.4 W	-	VZ07	**488650.01**	for cable connection	00	**-**	-25	65
		IP 67		0.4 W	-	VZ08	**488660.01**	with 2000mm cable	00	**-**	-25	65
		IP 65		0.4 W	-	VZ09	**488670.01**	with DIN plug	00	**-**	-25	65
9	**32 mm**	IP 65	**Class F**	9 W	9 W	DZ93	**492387**	with DIN plug	N9	**8886**	-40	50
	50 mm	IP 67	**EEx me II T4**	8 W	-	HZ14	**483371.01**	for cable connection	00	**-**	-40	65
		IP 66	**EEx me II T6/T5**	1.5 W	-	VZ13	**492200**	for cable connection	00	**-**	-40	40/75
CPR		IP 66	**EEx me II T5/T4**	6 W	6 W	VZ14	**492300**	for cable connection	00	**-**	-40	40/75
		IP 67	**EEx m II T5/T4**	5 W	5 W	VZ02	**492270**	with 1500mm cable	00	**-**	-40	40/65
		IP 66	**EEx ib IIB T6**	0.8 W	-	VZ11	**482660**	for cable connection	00	**-**	-40	75
		IP 66	**EEx ib IIC T6**	0.8 W	-	VZ12	**483330.01**	for cable connection	00	**-**	-40	75
		IP 66	**EEx ia IIC T6**	0.8W	-	VZ92	**492965.02**	for cable connection	00	**-**	-40	65
10	**50 mm**	IP 66	**EEx me II T6/T5**	1.5 W	-	VZ26	**492210**	for cable connection	00	**-**	-40	40/75
		IP 66	**EEx me II T5/T4**	6 W	6 W	VZ27	**492310**	for cable connection	00	**-**	-40	40/75
OFFSHORE		IP 66	**EEx ib IIB T6**	0.8 W	-	VZ11	**482660**	for cable connection	00	**-**	-40	75
		IP 66	**EEx ib IIC T6**	0.8 W	-	VZ12	**483330.01**	for cable connection	00	**-**	-40	75
		IP 66	**EEx ia IIC T6**	0.8W	-	VZ91	**492965.01**	for cable connection	00	**-**	-40	65
11	**50 mm**	IP 65	**EEx d II C T4/T5/T6**	8 W	8 W	HZ19	**483270**	for cable , M20x1.5	00	**-**	-40	80/75/60
		IP 65	**EEx d II C T4/T5/T6**	8 W	8 W	HZ21	**483270.02**	for cable , 1/2 NPT	00	**-**	-40	80/75/60
12	**50 mm**	IP 66	**EEx me II T5/T4**	6 W	6 W	VZ27	**492310**	for cable connection	00	**-**	-40	40/75
		IP 66	**EEx ib IIB T6**	0.8 W	-	VZ22	**482160.01**	for cable connection	00	**-**	-40	65
		IP 66	**EEx ib IIC T6**	0.8 W	-	VZ23	**482870.01**	for cable connection	00	**-**	-40	65

Note: This table is indicative only. Please contact your distributor to confirm your selection.

316 St. Steel valves for chemical, petrochemical and offshore applications

ACTUATION	CONNECTION	ORIFICE (MM)	MAX. PRESSURE (BAR)	PAGE
Direct operated	1/4	2.5 to 5.0	1000.0	274/278
	3/8	5.0	1000.0	282
	SB	2.5	1400.0	276/278
Direct operated with manual reset	1/4	5.0	1000.0	274/280
	3/8	5.0	1000.0	274/276

Notes:

316 St. Steel valves for chemical, petrochemical and offshore applications

3/2

Applications

Directional control and fail/safe function in valve actuator circuits in corrosive and hazardous environment.

Solenoid pilots for main stage valves in corrosive and hazardous locations.

Port size	Orifice (mm)	Flow factors (L/min)	Admissible differential pressure kPa			Fluid temp. °C	Admissible ambient temp. °C	Seat disc	Reference numbers		Power consumption (W)		Degree of protection Ex	El. Part Group *	Dim ref.
			Min	Max					Valve reference no.						
NPT		Qn		DC	AC					Coil	DC	AC			
Direct operated with manual reset															
316L Stainless Steel body/Pipe mounting															
1/4	5	680	0	1000	1000	-25 to +65	-25 to +65	NBR	**U033X51561D** 1	**483270** 2	8	8	EEx d IIC T4/T5/T6	11	7030
	5	680	0	1000	1000	-25 to +65	-25 to +65	NBR		**483270.02** 2	8	8	EEx d IIC T5	11	
	5	680	0	1000	-	-25 to +65	-25 to +65	NBR	**U033X5156** 1	**482870.01** 2	0.8	-	EEx ia IIC T6	12	7771
	5	680	0	1000	1000	-25 to +65	-25 to +65	NBR		**492310** 2	6	6	EEx me II T4(T5)	12	
3/8	5	680	0	1000	1000	-25 to +65	-25 to +65	NBR	**U033X52561D** 1	**483270** 2	8	8	EEx d II C T4(T6)	11	7672
	5	680	0	1000	1000	-25 to +65	-25 to +65	NBR		**483270.02** 2	8	8	EEx d II C T4(T6)	11	

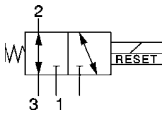

Table continued on page 276

Notes:

* See Electrical Parts Group table at end of section
1. With manual reset
2. Valve with NPT ports

316 St. Steel valves for chemical, petrochemical and offshore applications

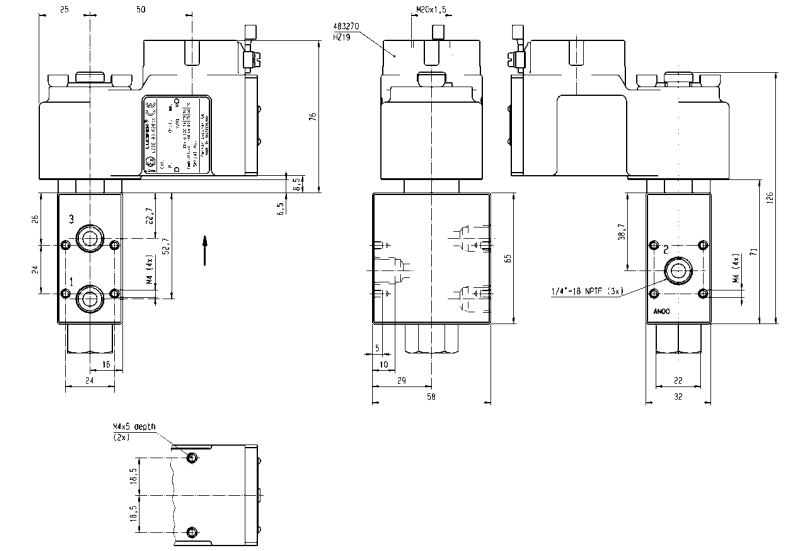

Dimension reference 7030

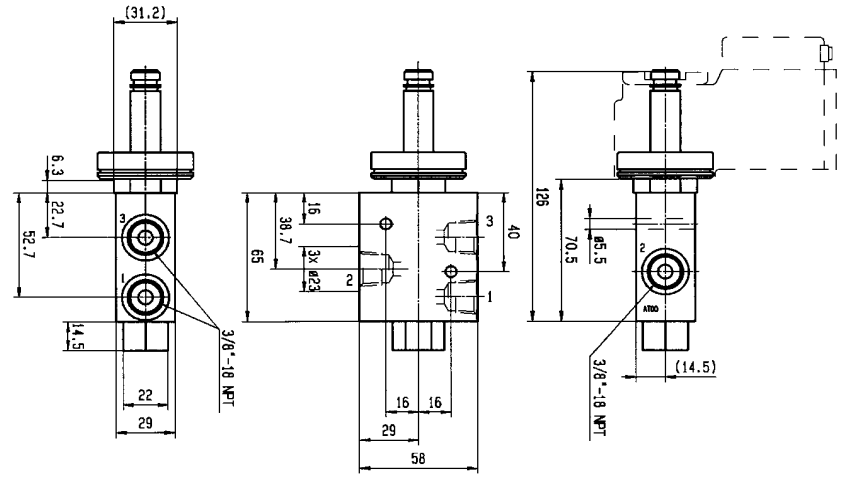

Dimension reference 7672

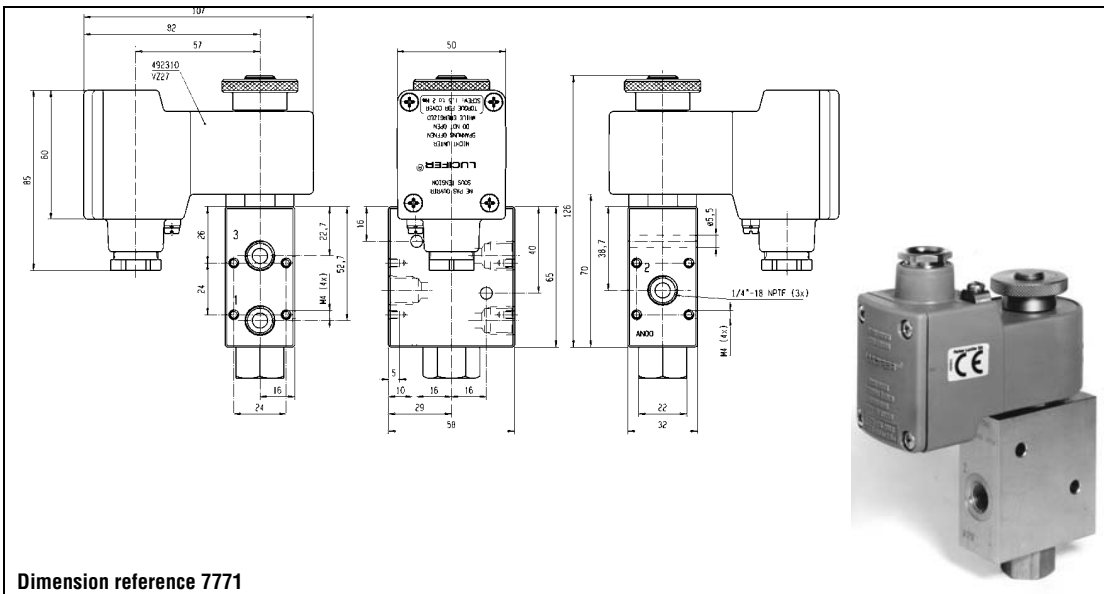

Dimension reference 7771

316 St. Steel valves for chemical, petrochemical and offshore applications

Port size NPT	Orifice (mm)	Flow factors (L/min) Qn	Admissible differential pressure kPa Min	Max DC	Max AC	Fluid temp. °C	Admissible ambient temp. °C	Seat disc	Reference numbers Valve reference no.	Coil	Power consumption (W) DC	AC	Degree of protection Ex	El. Part Group *	Dim ref.

Direct operated with manual reset

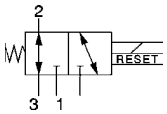

316L Stainless Steel body/Pipe mounting

3/8	5	680	0	1000	-	-25 to +65	-25 to +65	NBR	**U033X5256** [1]	**482870.01** [2]	0.8	-	EEx ia IIC T6	12	7671
	5	680	0	1000	1000	-25 to +65	-25 to +65	NBR		**492310** [2]	6	6	EEx me II T4(T5)	12	

Direct operated

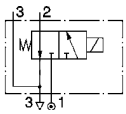

316L Stainless Steel body/NAMUR interface

3/8	5	680	0	1000	1000	-25 to +65	-25 to +65	NBR	**U131X1201** [2]	**492965.01**	0.8	-	EEx ia IIC T6	9,10	7668
	5	680	0	1000	1000	-25 to +65	-25 to +65	NBR		**492310**	6	6	EEx me IIT4/T5	9,10	

Direct operated

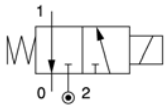

316L Stainless Steel body/Sub-base mounting

SB	2.5	220	0	1000	-	-25 to +65	-25 to +50	FKM	**U131F5695** [2]	**492965.01**	0.8	-	EEx ia IIC T6	10	85
	2.5	220	0	1000	1000	-25 to +75	-25 to +50	FKM		**492310**	6	6	EEx me II T4(T5)	10	

Table continued on page 278

Notes:

* See Electrical Parts Group table at end of section

1. With manual reset
2. Valve with NPT ports

316 St. Steel valves for chemical, petrochemical and offshore applications

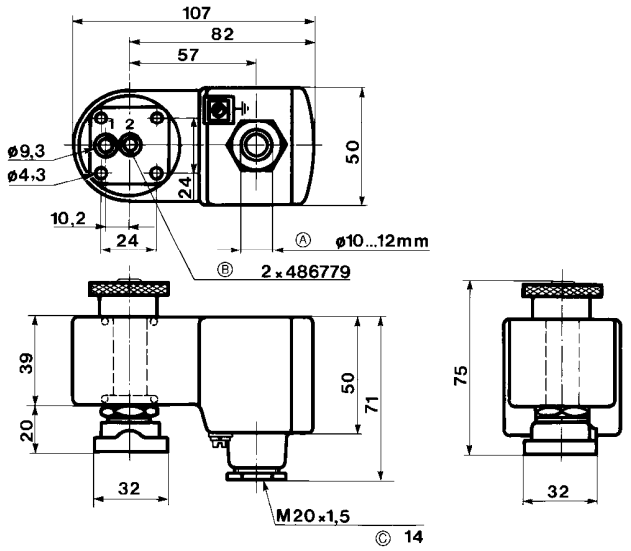

Dimension reference 85

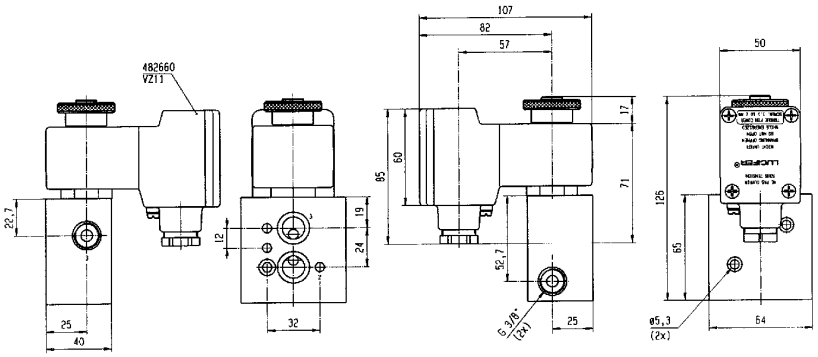

Dimension reference 7668

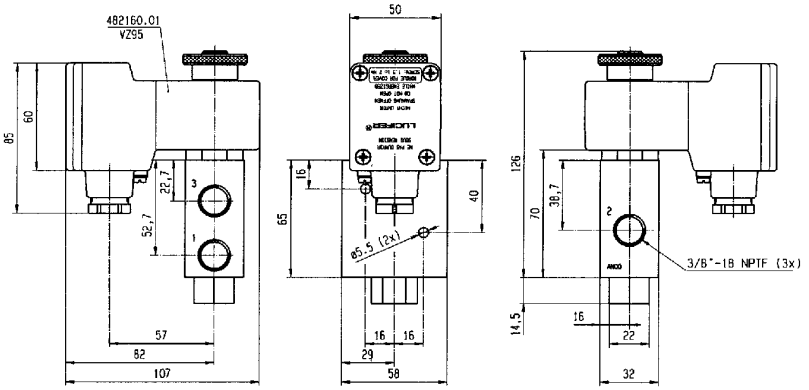

Dimension reference 7671

316 St. Steel valves for chemical, petrochemical and offshore applications

Port size NPT	Orifice (mm)	Flow factors (L/min) Qn	Admissible differential pressure kPa Min	Max DC	Max AC	Fluid temp. °C	Admissible ambient temp. °C	Seat disc	Reference numbers Valve reference no.	Coil	Power consumption (W) DC	AC	Degree of protection Ex	El. Part Group *	Dim ref.

Direct operated

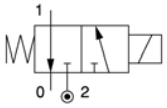

316L Stainless Steel body/Sub-base mounting

SB	2.5	220	0	1400	1400	-25 to +80	-25 to +50	FKM	**U131F56951D** [1]	**483270**	8	8	EEx d IIC T5	11	3783
	2.5	220	0	1400	1400	-25 to +80	-25 to +50	FKM		**483270.02**	8	8	EEx d IIC T5	11	

Direct operated

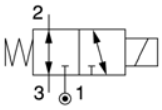

316L Stainless Steel body/Pipe mounting

1/4	2.5	220	0	850	-	-25 to +75	-25 to +50	FKM	**U133V5695** [1]	**492965.01** [2]	0.8	-	EEx ia IIC T6	10	86
	2.5	220	0	850	850	-25 to +75	-25 to +50	FKM		**492310** [3]	6	6	EEx me II T4(T5)	10	
	2.5	220	0	850	850	-25 to +75	-25 to +50	FKM	**U133V56951D** [1]	**483270**	8	8	EEx d IIC T5	11	6714
	2.5	220	0	850	850	-25 to +75	-25 to +50	FKM		**483270.02**	8	8	EEx d IIC T5	11	

Table continued on page 280

Notes:

* See Electrical Parts Group table at end of section
1. Valve with NPT ports
2. Max. power consumption DC = 1 W with connected cable length max. 4 km (2 km back and forth), section 1 mm²
3. Other coil-housing available

316 St. Steel valves for chemical, petrochemical and offshore applications

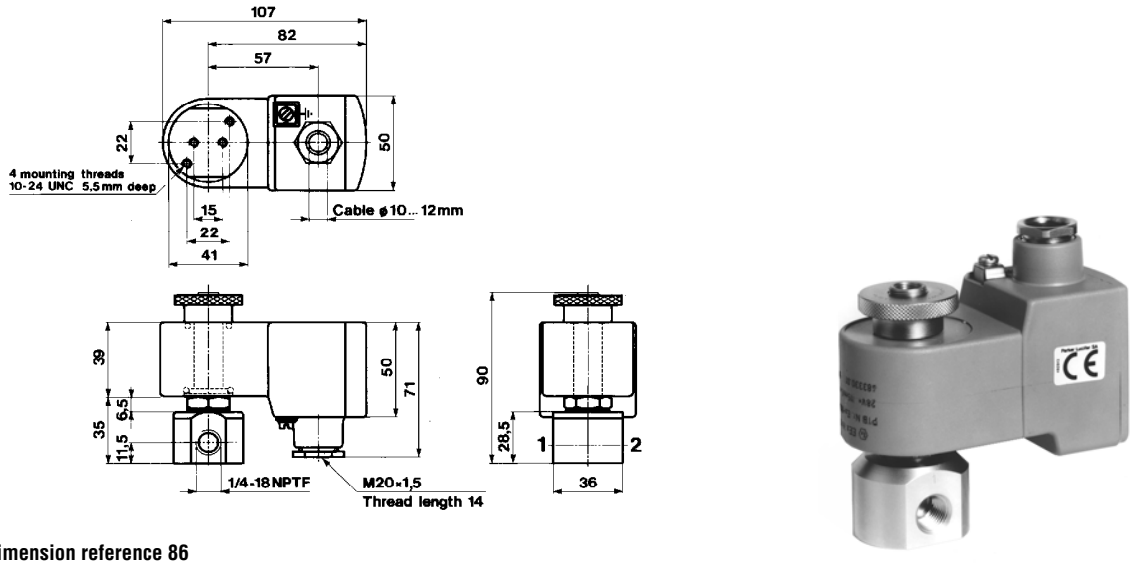

Dimension reference 86

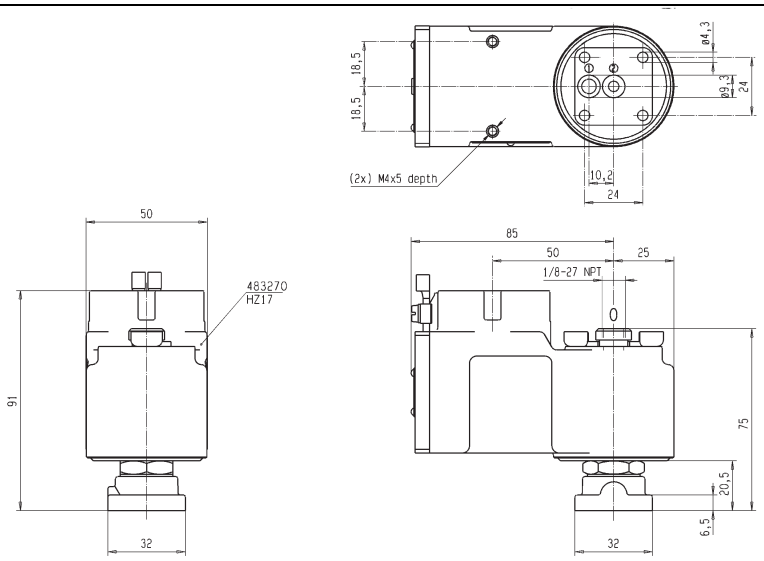

Dimension reference 3783

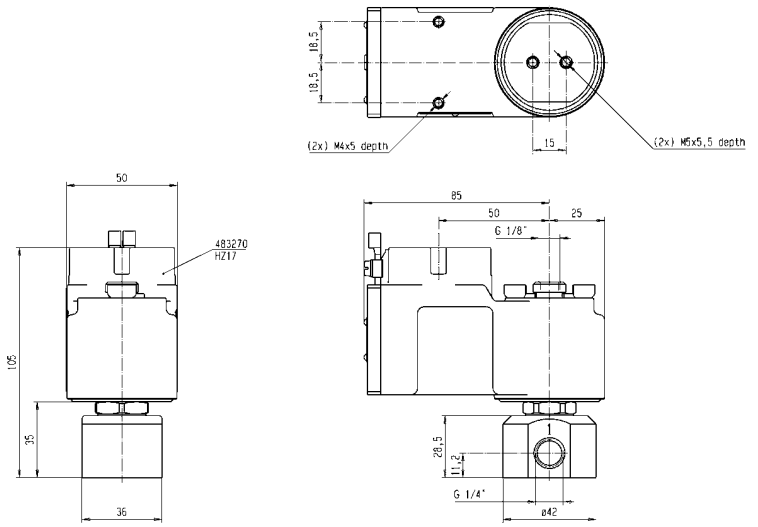

Dimension reference 6714

316 St. Steel valves for chemical, petrochemical and offshore applications

Port size NPT	Orifice (mm)	Flow factors (L/min) Qn	Admissible differential pressure kPa Min	Max DC	Max AC	Fluid temp. °C	Admissible ambient temp. °C	Seat disc	Reference numbers Valve reference no.	Coil	Power consumption (W) DC	AC	Degree of protection Ex	El. Part Group *	Dim ref.

Direct operated

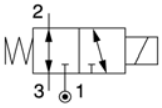

316L Stainless Steel body/Pipe mounting

1/4	5	680	0	1000	-	-25 to +65	-25 to +65	NBR	**U133X5156** 1	**492965.01**	0.8	-	EEx ia IIC T6	10	7770
	5	680	0	1000	1000	-25 to +65	-25 to +65	NBR		**492310**	6	6	EEx me II T4(T5)	10	

Direct operated

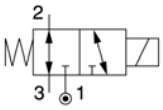

316L Stainless Steel body/Pipe mounting

1/4	5	680	0	1000	1000	-25 to +65	-25 to +65	NBR	**U133X51561D** 1	**483270**	8	8	EEx d IIC T4/T5/T6	11	7011
	5	680	0	1000	1000	-25 to +65	-25 to +65	NBR		**483270.02**	8	8	EEx d IIC T4/T5/T6	11	
	5	680	0	1000	-	-25 to +65	-25 to +65	NBR	**U133X5196** 2	**492965.01** 1	0.8	-	EEx ia IIC T6	10	7770
	5	680	0	1000	1000	-25 to +65	-25 to +65	NBR		**492310** 1	6	6	EEx me II T4(T5)	10	
	5	680	0	1000	1000	-25 to +65	-25 to +65	NBR	**U133X51961D** 1	**483270**	8	8	EEx d IIC T5	11	7038
	5	680	0	1000	1000	-25 to +65	-25 to +65	NBR		**483270.02**	8	8	EEx d IIC T5	11	

Table continued on page 282

Notes:

* See Electrical Parts Group table at end of section
1. Valve with NPT ports
2. Optional manual override available on request - change suffix 96 to 56

Valve with NPT ports

316 St. Steel valves for chemical, petrochemical and offshore applications

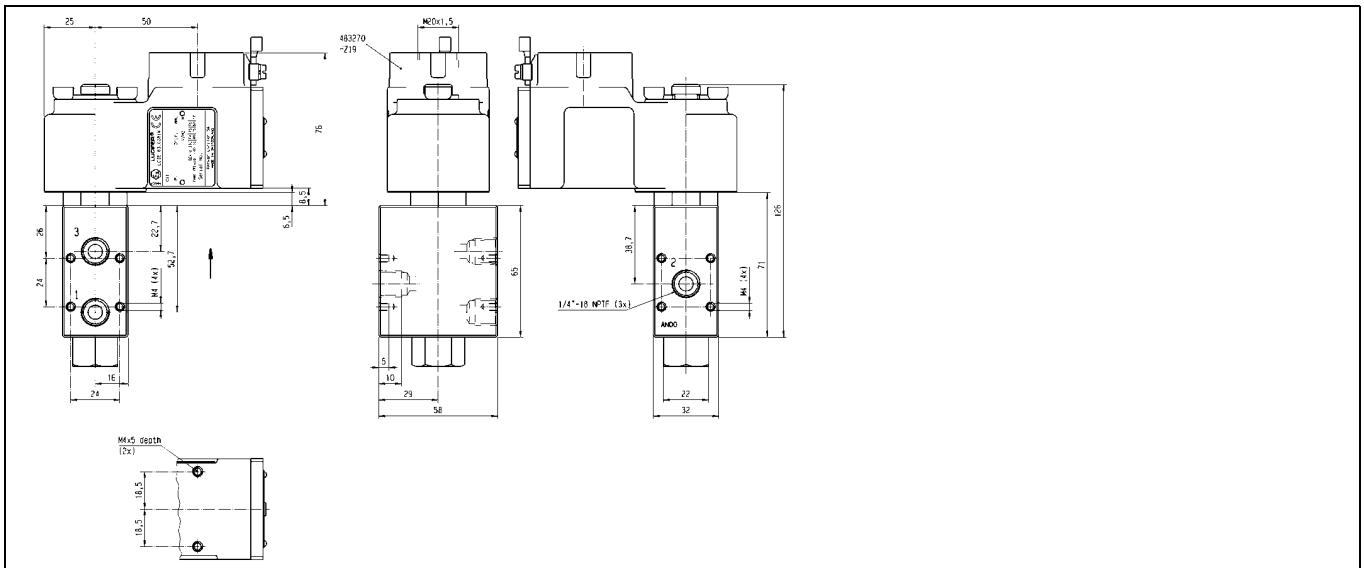

Dimension reference 7011

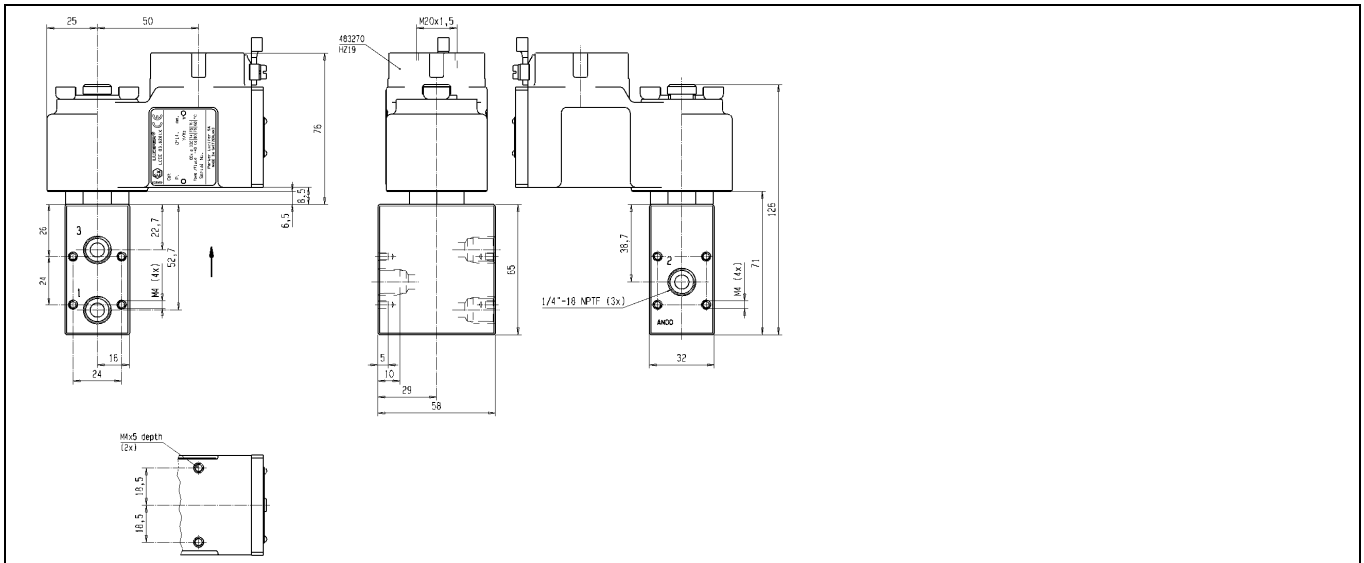

Dimension reference 7038

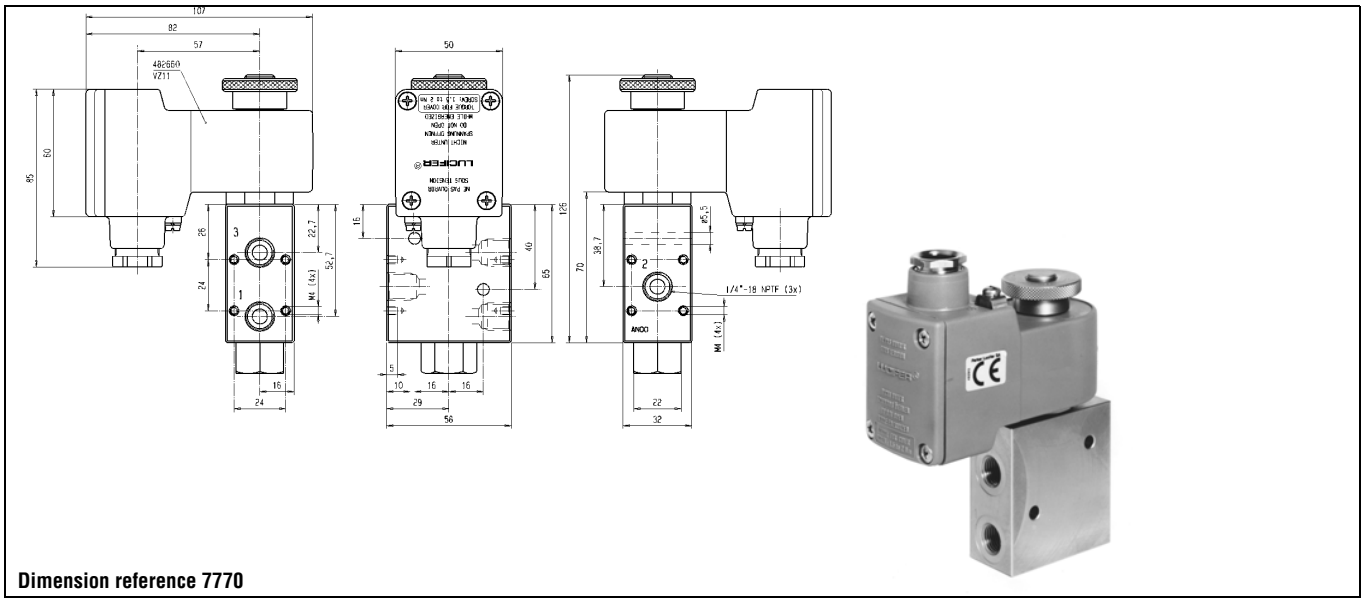

Dimension reference 7770

316 St. Steel valves for chemical, petrochemical and offshore applications

Direct operated

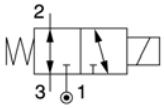

316L Stainless Steel body/Pipe mounting

Port size NPT	Orifice (mm)	Flow factors (L/min) Qn	Admissible differential pressure kPa Min	Max DC	Max AC	Fluid temp. °C	Admissible ambient temp. °C	Seat disc	Reference numbers Valve reference no.		Coil	Power consumption (W) DC	AC	Degree of protection Ex	El. Part Group *	Dim ref.
3/8	5	680	0	1000	1000	-25 to +65	-25 to +65	NBR	**U133X5296**	1	**492965.01**	0.8	-	EEx ia IIC T6	10	7669
	5	680	0	1000	1000	-25 to +65	-25 to +65	NBR			**492310**	6	6	EEx me II T4(T5)	10	
	5	680	0	1000	1000	-25 to +65	-25 to +65	NBR	**U133X52961D**	1	**483270**	8	8	EEx d IIC T4/T5/T6	10	7670
	5	680	0	1000	1000	-25 to +65	-25 to +65	NBR			**483270.02**	8	8	EEx d IIC T4/T5/T6	10	

Notes:

* See Electrical Parts Group table at end of section

1. Valve with NPT ports

316 St. Steel valves for chemical, petrochemical and offshore applications

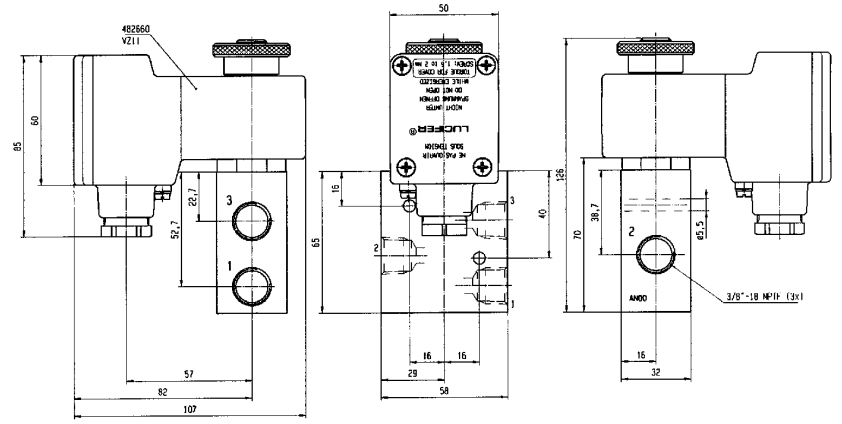

Dimension reference 7669

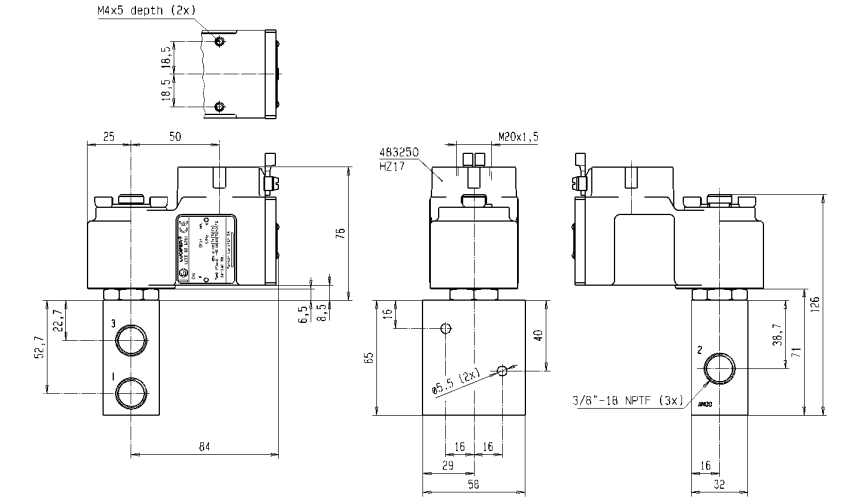

Dimension reference 7670

Electrical parts options with 3/2 - 316L Stainless steel valves for chemical, petrochemical & Offshore applications

El.part Group	Coil	Protection class	Protection class / Temperature class	Power DC	Power AC	Coil Order No.	Coil Ref. No.	Connection	Housing Order No.	Housing Ref. No.	Ambient temp. min.	Ambient temp. max.
1	22 mm	IP65	**Class F**	2.5	2	DA01	**488980**	for DIN B plug	A2	**8993**	-40	50
		IP65	**Class F**	2.5	2	DA02	**481045**	with DIN B plug	A2	**8993**	-40	50
		IP65	**EEx m II T5**	2.5	2	VA12	**482606.10**	with 1500mm cable	00	**-**	-40	50
2	32 mm (Std)	IP65	**Class F**	9	8	DZ02	**481865**	for DIN A plug	NL	**8132**	-40	50
		IP65	**Class F**	9	8	DZ03	**482725**	with DIN A plug	NL	**8132**	-40	50
		IP65	**Class H**	9	8	DZ04	**492453**	for DIN A plug	NL	**8132**	-40	50
		IP65	**Class H**	9	8	DZ05	**492726**	with DIN A plug	NL	**8132**	-40	50
		IP65	**Class F, 50/60 Hz**	-	9	DZ06	**483510**	for DIN A plug	NL	**8132**	-40	50
		IP65	**Class F, 50/60 Hz**	-	9	DZ07	**482635**	with DIN A plug	NL	**8132**	-40	50
		IP65	**EEx m II T4**	9	8	HZ90	**492670.10**	with 3000mm cable	00	**-**	-25	40
	50 mm (Std)	IP10/IP44	**Class F**	8	8	EZ01	**481000**	screw-terminals	E0	**4270**	-40	50
		IP10/IP44	**Class H**	8	8	EZ02	**485100**	screw-terminals	E0	**4270**	-40	50
		IP67	**Class F, IP 67, M20x1.5**	8	8	EZ01	**481000**	screw-terminals	G1	**4538**	-40	50
		IP65	**EEx m II T4/T5**	9	8	VZ01	**492070**	with 1500mm cable	00	**-**	-40	40/65
		IP67	**EEx me II T4**	8	8	HZ06	**483371**	for cable connection	00	**-**	-40	65
		IP66	**EEx me II T3/T4**	11	9	VZ90	**492190.10**	for cable connection	00	**-**	-40	75/40
		IP67	**EEx me II T3/T4**	8	8	HZ23	**494040**	for cable connection	00	**-**	-40	90/65
		IP65	**EEx md IIC T4/T5**	8	8	HZ09	**493640**	with 1500mm cable	00	**-**	-40	75/40
5	50 mm	IP54	**EEx d IIC T4/T5/T6**	8	8	HZ08	**483250**	for cable, 1/2 NPT	00	**-**	-40	80/75/60
7	32 mm I.S.	IP65	**EEx ia II C T6**	0.4	-	DZ12	**483580.01**	for DIN A plug	NL	**8132**	-40	55
		IP65	**EEx ia II C T6**	0.4	-	DZ13	**483960.01**	with DIN A plug	NL	**8132**	-40	55
	50 mm I.S.	IP66	**EEx ia II C T6**	0.4	-	VZ93	**494035.10**	for cable connection	00	**-**	-40	65
		IP67	**EEx ia II C T6**	0.4	-	VZ08	**488660.01**	with 2000mm cable	00	**-**	-40	65
		IP65	**EEx ia II C T6**	0.4	-	VZ09	**488670.01**	with DIN A plug	00	**-**	-40	65
9	32 mm	IP65	**Class F**	9	9	DZ93	**492387**	with DIN A plug	N9	**8886**	-40	50
	50 mm	IP66	**EEx me II T5/T6**	1.5	-	VZ13	**492200**	for cable connection	00	**-**	-40	75/40
		IP67	**EEx me II T4**	8	-	VZ14	**483371.01**	for cable connection	00	**-**	-40	65
CPR		IP66	**EEx me II T4/T5**	6	6	VZ15	**492300**	for cable connection	00	**-**	-40	75/40
		IP67	**EEx m II T4/T5**	5	5	VZ02	**492270**	with 1500mm cable	00	**-**	-40	65/40
		IP65	**EEx ib IIB T6**	0.8	-	VZ11	**482660**	for cable connection	00	**-**	-40	75
		IP66	**EEx ib IIC T6**	0.8	-	VZ12	**483330.01**	for cable connection	00	**-**	-40	75
		IP66	**EEx ia IIC T6**	0.8	-	VZ92	**492965.02**	for cable connection	00	**-**	-40	65
10	50 mm	IP66	**EEx me II T5/T6**	1.5	-	VZ26	**492210**	for cable connection	00	**-**	-40	75/40
		IP66	**EEx me II T4/T5**	6	6	VZ27	**492310**	for cable connection	00	**-**	-40	75/40
OFFSHORE		IP65	**EEx ib IIB T6**	0.8	-	VZ11	**482660**	for cable connection	00	**-**	-40	75
		IP66	**EEx ib IIC T6**	0.8	-	VZ12	**483330.01**	for cable connection	00	**-**	-40	75
		IP66	**EEx ia IIC T6**	0.8	-	VZ91	**492965.01**	for cable connection	00	**-**	-40	65
11	50 mm	IP65	**EEx d II C T4/T5/T6**	8	8	HZ19	**483270**	for cable , M20x1.5	00	**-**	-40	80/75/60
	EEx d	IP65	**EEx d II C T4/T5/T6**	8	8	HZ21	**483270.02**	for cable , 1/2 NPT	00	**-**	-40	80/75/60
12	50 mm	IP66	**EEx me II T4/T5**	6	6	VZ27	**492310**	for cable connection	00	**-**	-40	75/40
		IP66	**EEx ia IIB T6**	0.8	-	VZ22	**482160.01**	for cable connection	00	**-**	-40	65
		IP66	**EEx ia IIC T6**	0.8	-	VZ23	**482870.01**	for cable connection	00	**-**	-40	65

Note: This table is indicative only. Please contact your distributor to confirm your selection.

316L St. Steel valves for actuator control

ACTUATION	CONNECTION	ORIFICE (MM)	MAX. PRESSURE (BAR) <KPA>	PAGE
Direct operated	1/4	2.5 to 5	<1000.0>	288
	3/8	5	<1000.0>	290/292
	SB	2.5	<1000.0>	292
Pilot operated	1/4 - 1/8	4	10.0	296/298/308/310
	3/8 - 1/4	8	10.0	300/302/312
Pilot operated - Integrated pilot	1/4 - 1/8	4	10.0	296/308
	3/8 - 1/4	8	10.0	298/310
Two solenoids and main pressure supply	1/4 - 1/8	4	10.0	304/314
	3/8 - 1/4	8	10.0	304/306/314
Pilot operated with external pressure supply	3/8 - 1/4	8	10.0	302
External pressure supply	3/8 - 1/4	8	10.0	302
Direct operated with manual reset	1/4	5	<1000.0>	292/294
	3/8	5	<1000.0>	294

Notes:

316 St. Steel valves for actuator control

3/2

Applications

Directional control and fail/safe function in valve actuator circuits in corrosive and hazardous environment.

Solenoid pilots for main stage valves in corrosive and hazardous locations.

316L Stainless Steel body/Pipe mounting

Direct operated

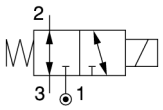

Port size NPT	Orifice (mm)	Flow factors (L/min Qn	Admissible differential pressure kPa Min	Max DC	Max AC	Fluid temp. °C Min	Max	Seat disc	Reference numbers: Global valve reference	Valve reference no.	Housing	OR Coil	Power consumption (W) DC	AC	Wt. (g)	El. Part Group *	Dim ref.
1/4	2.5	220	0	850	850	-25	75	FKM	7133VRN2LV9D	**U133V56951D** 1	-	**483270**	8	8	-	11	6714
	2.5	220	0	850	850	-25	75	FKM			-	**483270.02**	8	8	-	11	
	2.5	220	0	850	-	-25	75	FKM	7133VRN2LV95	**U133V5695** 1	-	**492965.01** 2	0.8	-	-	10	86
	2.5	220	0	850	850	-25	75	FKM			-	**492310** 3	6	6	-	10	
	5	680	0	1000	1000	-25	65	NBR	7133XRN2SV1D	**U133X51561D** 1	-	**483270**	8	8	1960	11	7011
	5	680	0	1000	1000	-25	65	NBR			-	**483270.02**	8	8	1960	11	

Table continued on page 290

Notes:

* See Electrical Parts Group table at end of section
1. Valve with NPT ports
2. Max. power consumption DC = 1 W with connected cable length max. 4 km (2 km back and forth), section 1 mm²
3. Other coil-housing available

316 St. Steel valves for actuator control

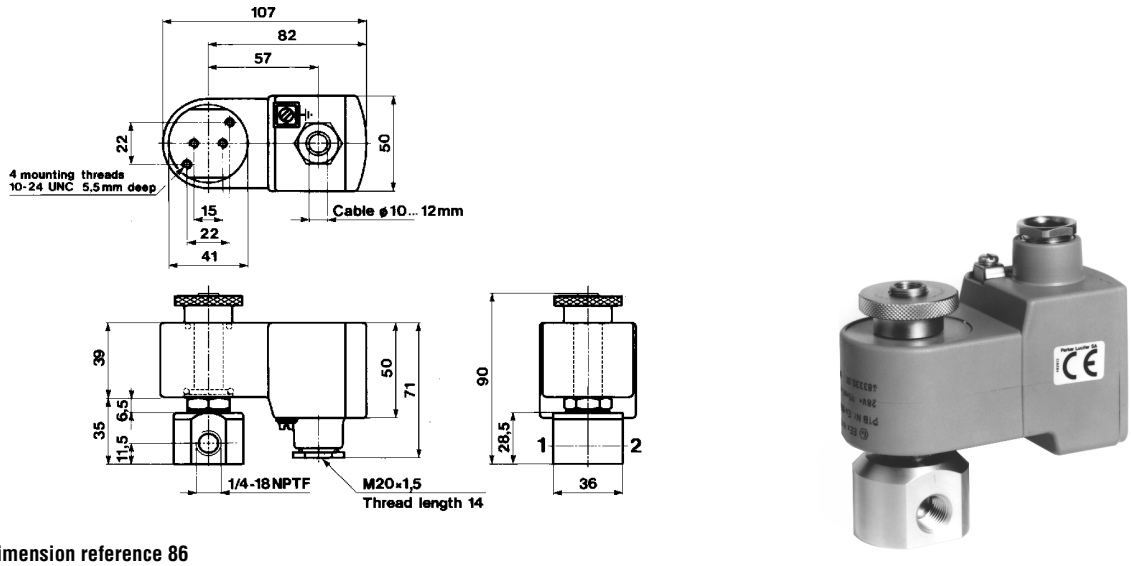

Dimension reference 86

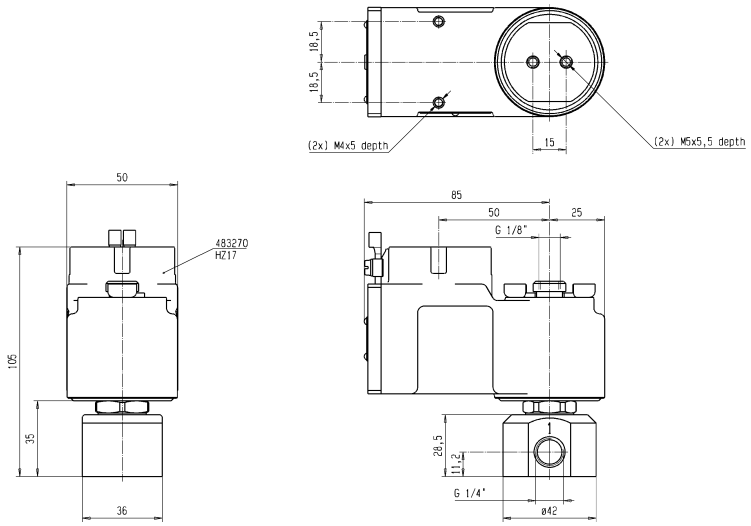

Dimension reference 6714

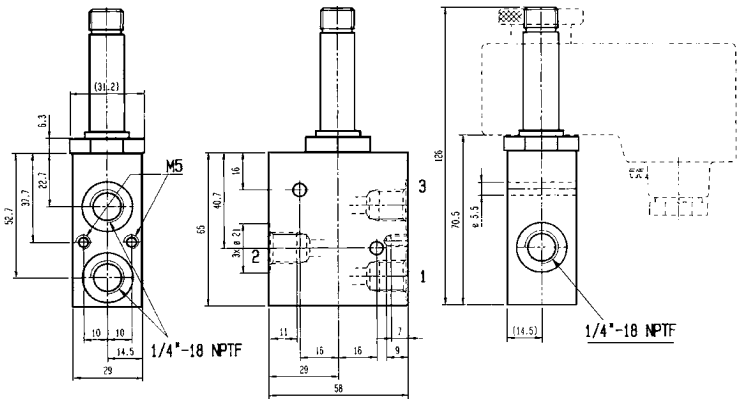

Dimension reference 7011

316 St. Steel valves for actuator control

316L Stainless Steel body/Pipe mounting

Direct operated

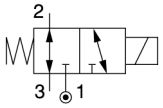

Port size NPT	Orifice (mm)	Flow factors (L/min Qn	Admissible differential pressure kPa Min	Max DC	Max AC	Fluid temp. °C Min	Max	Seat disc	Reference numbers: Global valve reference	Valve reference no.	Housing	OR Coil	Power consumption (W) DC	AC	Wt. (g)	El. Part Group *	Dim ref.
1/4	5	680	0	1000	-	-25	65	NBR	7133XRN2SV00	**U133X5156** [1]	-	**492965.01**	0.8	-	1340	10	7770
	5	680	0	1000	1000	-25	65	NBR			-	**492310**	6	6	1340	10	
3/8	5	680	0	1000	1000	-25	65	NBR	7133XRN3SN9H	**U133X52961D** [1]	-	**483270**	8	8	1940	10	7670
	5	680	0	1000	1000	-25	65	NBR			-	**483270.02**	8	8	1940	10	
	5	680	0	1000	1000	-25	65	NBR	7133XRN3SN96	**U133X5296** [1]	-	**492965.01**	0.8	-	-	10	7669
	5	680	0	1000	1000	-25	65	NBR			-	**492310**	6	6	-	10	

Table continued on page 292

Notes:

* See Electrical Parts Group table at end of section

1. Valve with NPT ports

316 St. Steel valves for actuator control

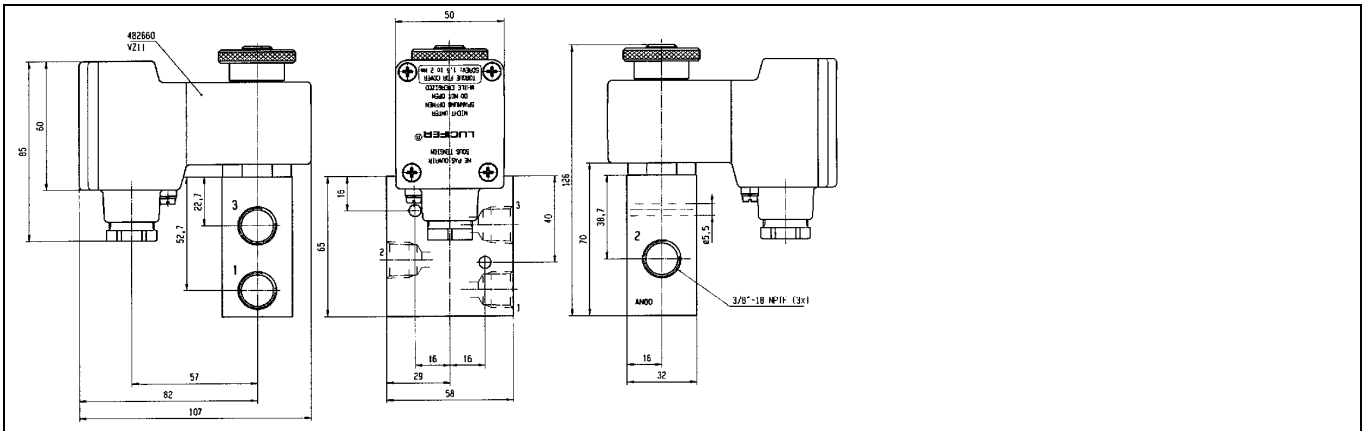

Dimension reference 7669

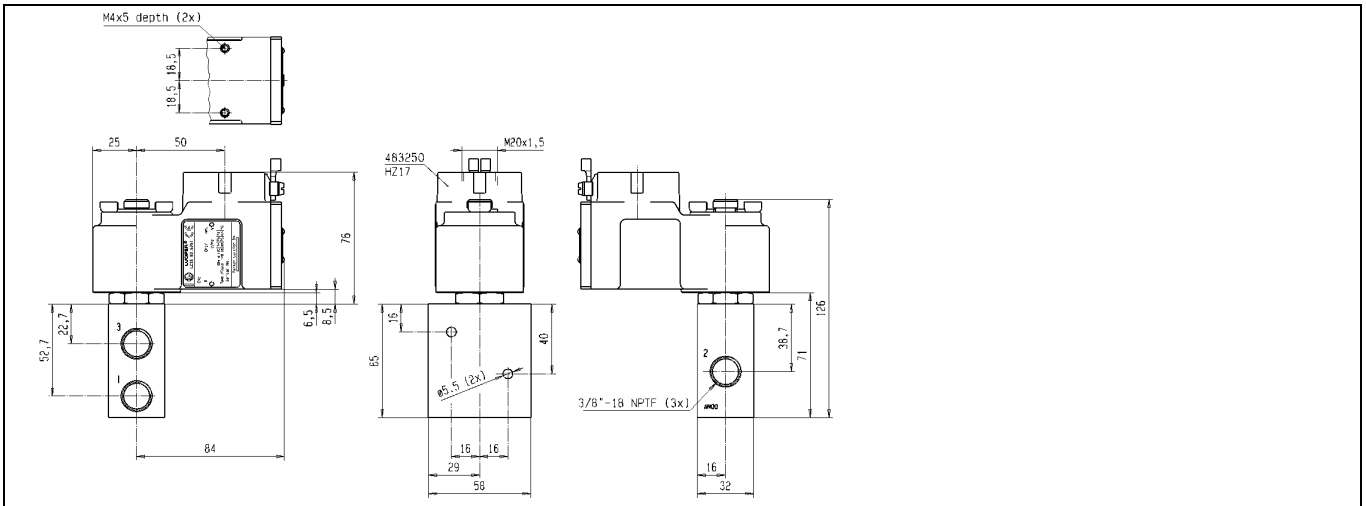

Dimension reference 7670

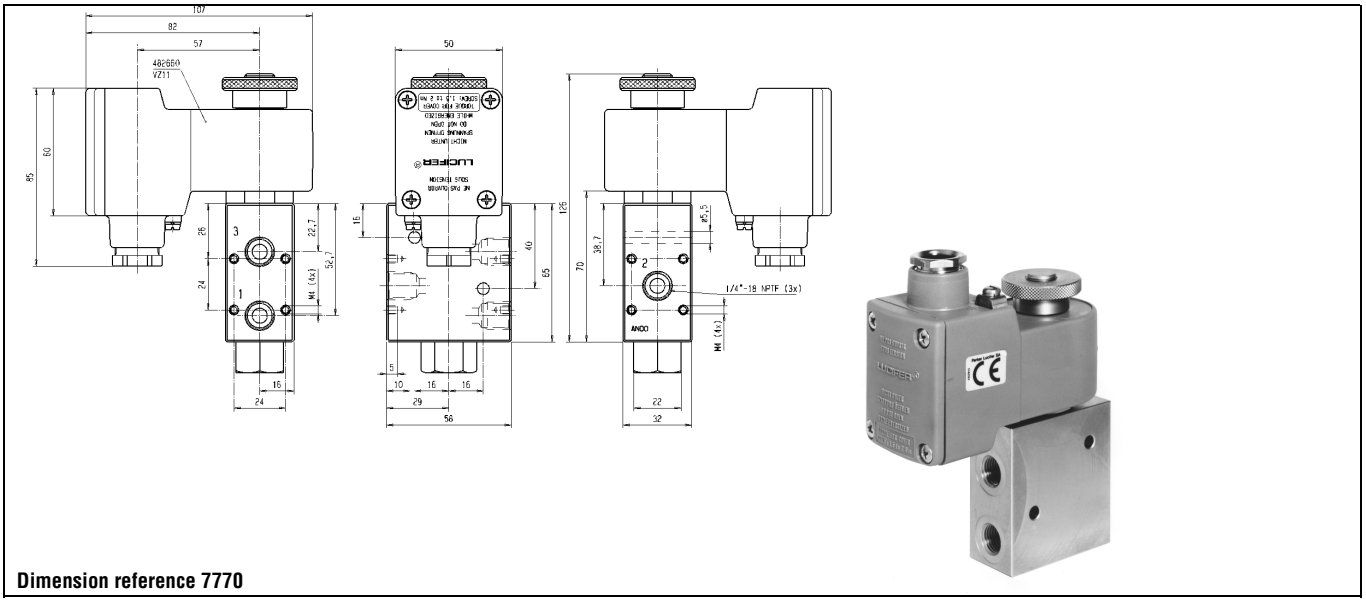

Dimension reference 7770

316 St. Steel valves for actuator control

Port size NPT	Orifice (mm)	Flow factors (L/min Qn	Admissible differential pressure kPa Min	Max DC	Max AC	Fluid temp. °C Min	Max	Seat disc	Reference numbers Global valve reference	Valve reference no.	Housing	OR Coil	Power consumption (W) DC	AC	Wt. (g)	El. Part Group *	Dim ref.

316L Stainless Steel body/Sub-base mounting

Direct operated

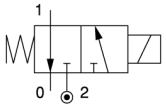

SB	2.5	220	0	1000	-	-25	65	FKM	7131FRF2LV95	**U131F5695** [1]	-	**492965.01**	0.8	-	700	10	85
	2.5	220	0	1000	1000	-25	75	FKM			-	**492310**	6	6	700	10	

316L Stainless Steel body/NAMUR interface

Direct operated

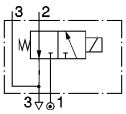

3/8	5	680	0	1000	1000	-25	65	NBR	7131XRKMVN00	**U131X1201** [1]	-	**492965.01**	0.8	-	-	9,10	7668
	5	680	0	1000	1000	-25	65	NBR			-	**492310**	6	6	-	9,10	

316L Stainless Steel body/Pipe mounting

Direct operated with manual reset

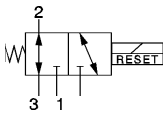

1/4	5	680	0	1000	1000	-25	65	NBR	7033XRN2SN1D	**U033X51561D** [2]	-	**483270** [1]	8	8	2150	11	7030
	5	680	0	1000	1000	-25	65	NBR			-	**483270.02** [1]	8	8	2150	11	

Table continued on page 294

Notes:

* See Electrical Parts Group table at end of section

1. Valve with NPT ports
2. With manual reset

316 St. Steel valves for actuator control

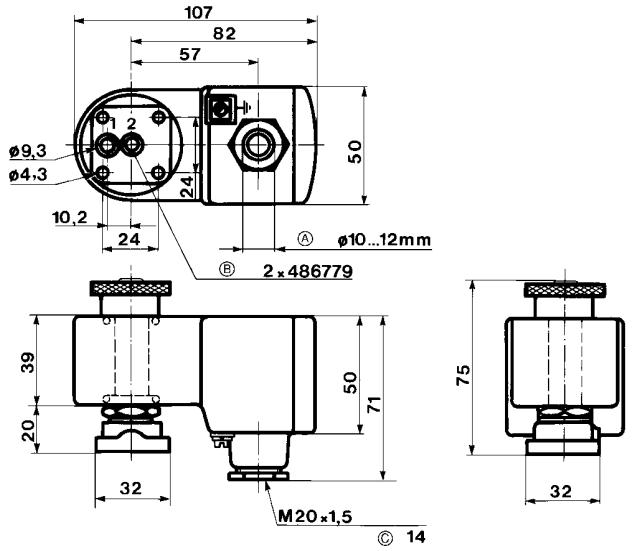

Dimension reference 85

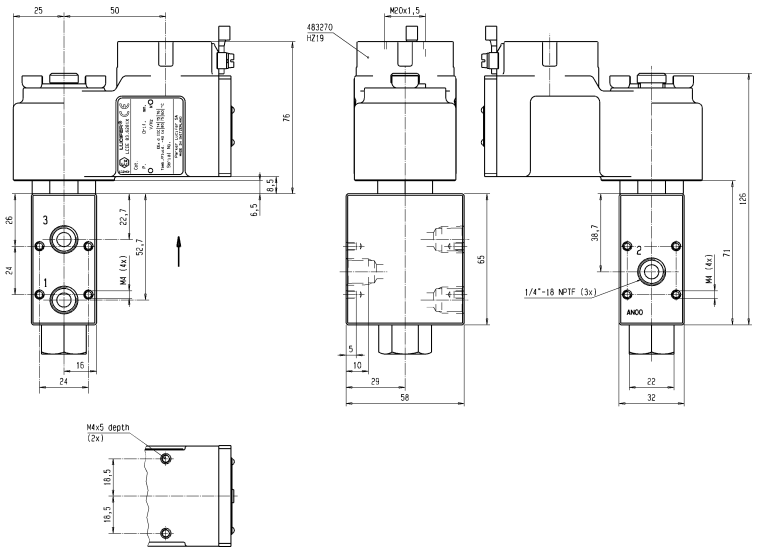

Dimension reference 7030

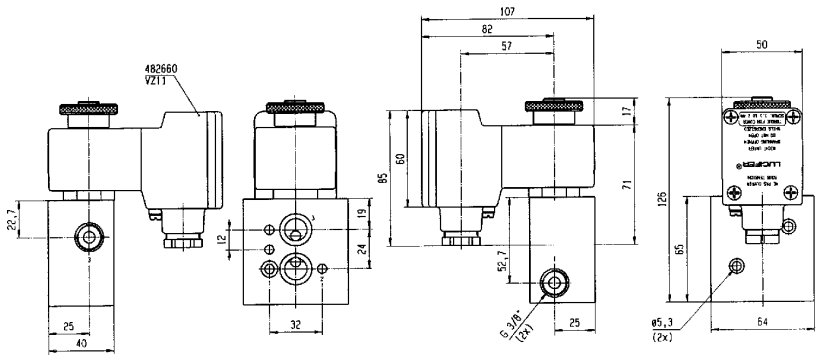

Dimension reference 7668

316 St. Steel valves for actuator control

Port size NPT	Orifice (mm)	Flow factors (L/min Qn	Admissible differential pressure kPa Min	Max DC	Max AC	Fluid temp. °C Min	Max	Seat disc	Reference numbers Global valve reference	Valve reference no.	Housing	OR Coil	Power consumption (W) DC	AC	Wt. (g)	El. Part Group *	Dim ref.

316L Stainless Steel body/Pipe mounting

Direct operated with manual reset

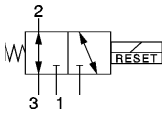

1/4	5	680	0	1000	-	-25	65	NBR	7033XRN2SN00	**U033X5156** [1]	-	**482870.01** [2]	0.8	-	1300	12	7771
	5	680	0	1000	1000	-25	65	NBR			-	**492310** [2]	6	6	1300	12	
3/8	5	680	0	1000	1000	-25	65	NBR	7033XRN3SN1D	**U033X52561D** [1]	-	**483270** [2]	8	8	1980	11	7672
	5	680	0	1000	1000	-25	65	NBR			-	**483270.02** [2]	8	8	1980	11	
	5	680	0	1000	-	-25	65	NBR	7033XRN3SN00	**U033X5256** [1]	-	**482870.01** [2]	0.8	-	1300	12	7671
	5	680	0	1000	1000	-25	65	NBR			-	**492310** [2]	6	6	1300	12	

Notes:

* See Electrical Parts Group table at end of section

1. With manual reset
2. Valve with NPT ports

316 St. Steel valves for actuator control

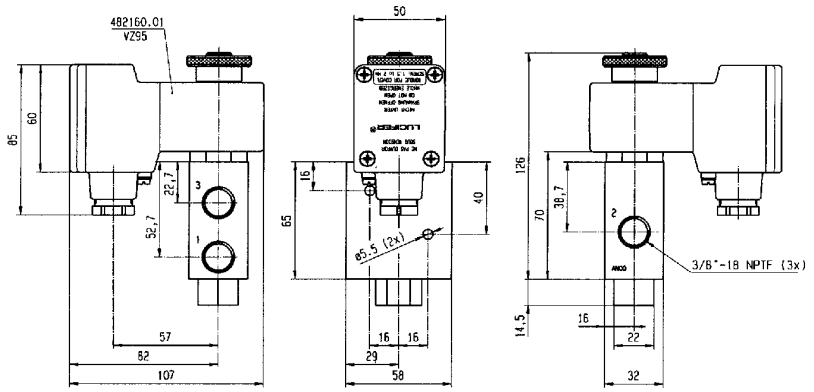

Dimension reference 7671

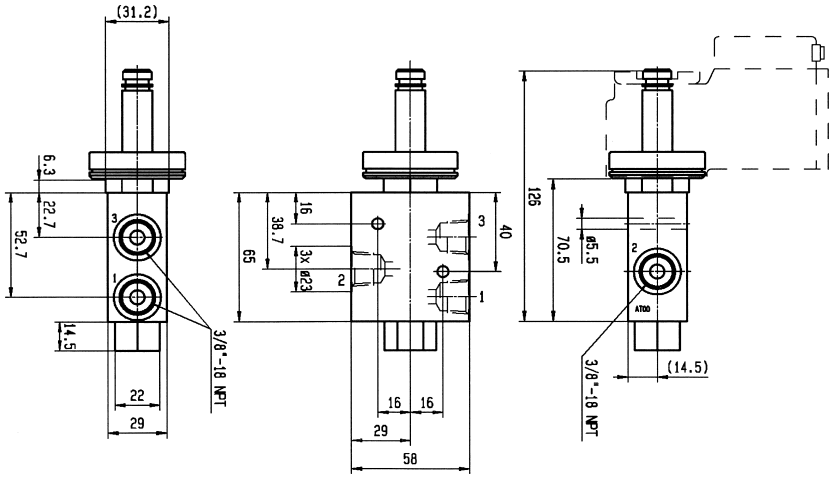

Dimension reference 7672

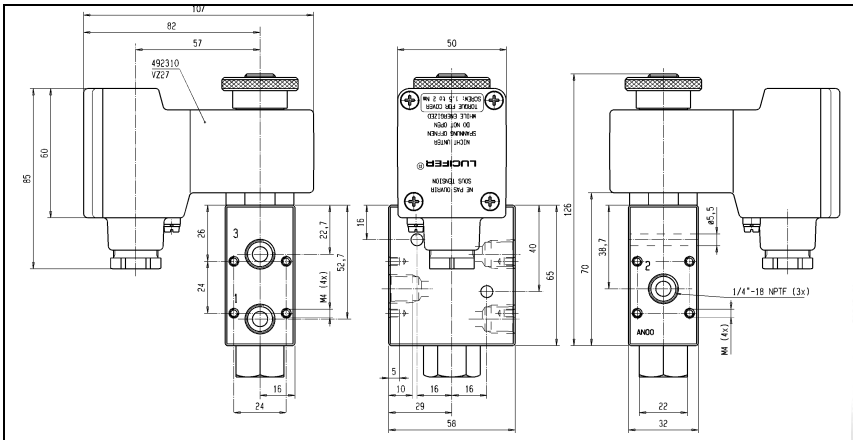

Dimension reference 7771

316L St. Steel valves for actuator control

5/2

Applications

Directional control and fail/safe function in valve actuator circuits in corrosive and hazardous environment.

Solenoid pilots for main stage valves in corrosive and hazardous locations.

Pilot operated - Integrated pilot

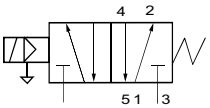

316L Stainless Steel body/Pipe mounting

Port size NPT	Orifice (mm)	Flow factors (L/min Qn	Admissible differential pressure bar Min	Max DC	Max AC	Fluid temp. °C Min	Fluid temp. °C Max	Seat disc	Reference numbers: Global valve reference	Valve reference no.	Housing	OR Coil	Power consumption (W) DC	Power consumption (W) AC	Wt. (g)	El. Part Group *	Dim ref.
1/4 - 1/8	4	600	2	10	10	-25	80	NBR	2341PRN2JNM1	**U341P0150** 1	**A2**	**488980** 2	2.5	2	220	1	7576

Pilot operated

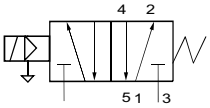

316L Stainless Steel body/Pipe mounting

1/4 - 1/8	4	600	2	10	10	-25	80	NBR	7341PRN2JN00	**U341P3150** 2	**NL**	**481865**	9	8	420	2	7547
	4	600	2	10	10	-25	80	NBR			**E0**	**481000**	8	8	420	2	
	4	600	2	10	10	-25	55	NBR	7341PRN2JN92	**U341P3192** 2	**NL**	**483580.01**	0.4	-	420	7	7549

Table continued on page 298

Notes:

* See Electrical Parts Group table at end of section
1. Manual override standard
2. Valve with NPT ports

316L Stainless Steel valves for actuator control - 5/2 valves - Pipe connection

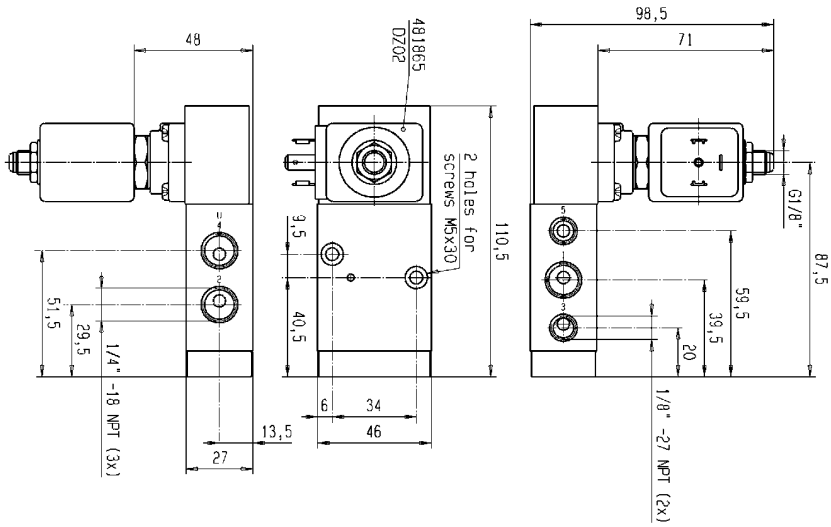

Dimension reference 7547

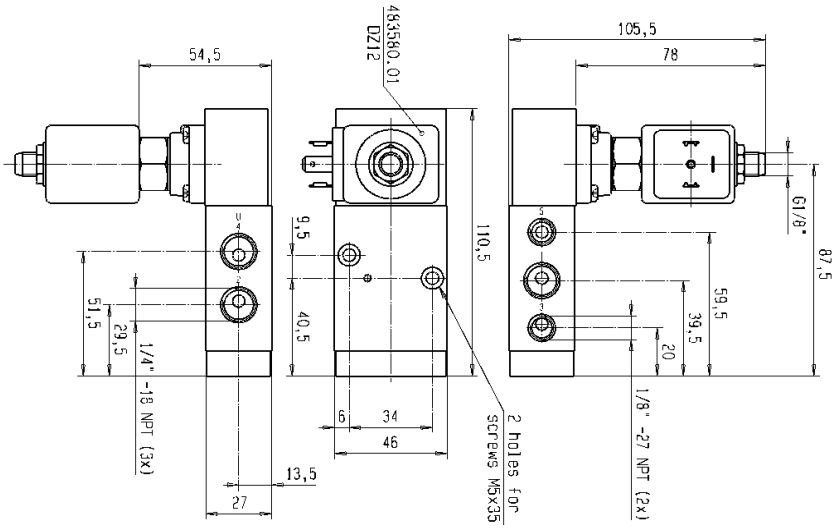

Dimension reference 7549

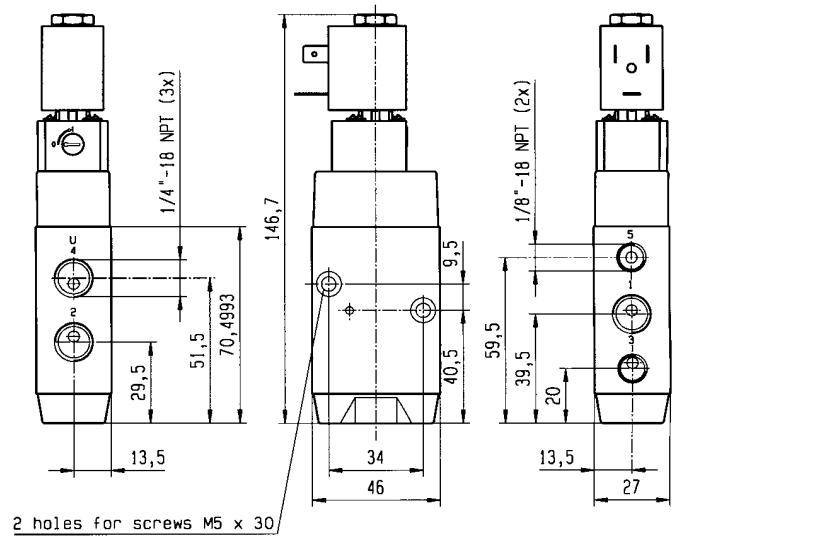

Dimension reference 7576

316L Stainless Steel valves for actuator control - 5/2 valves - Pipe connection

Port size NPT	Orifice (mm)	Flow factors (L/min Qn	Admissible differential pressure bar Min	Max DC	Max AC	Fluid temp. °C Min	Max	Seat disc	Reference numbers Global valve reference	Valve reference no.	Housing	OR Coil	Power consumption (W) DC	AC	Wt. (g)	El. Part Group *	Dim ref.
Pilot operated																	
316L Stainless Steel body/Pipe mounting																	
1/4 - 1/8	4	600	2	10	10	-25	75	NBR	7341PRN2JN95	**U341P3195** [1]	-	**492965.01**	0.8	-	-	10	7550
	4	600	2	10	10	-25	75	NBR			-	**492310**	6	6	-	10	
	4	600	2	10	10	-10	75	NBR	7341PRN2JN9D	**U341P31951D** [1]	-	**483270**	8	8	-	11	7551
	4	600	2	10	10	-10	75	NBR			-	**483270.02**	8	8	-	11	
Pilot operated - Integrated pilot																	
316L Stainless Steel body/Pipe mounting																	
3/8 - 1/4	8	1400	2	10	10	-25	80	NBR	2341PRN3NNM1	**U341P0250** [2]	**A2**	**488980** [1]	2.5	2	-	1	7578

Table continued on page 300

Notes:

* See Electrical Parts Group table at end of section
1. Valve with NPT ports
2. Manual override standard

316L Stainless Steel valves for actuator control - 5/2 valves - Pipe connection

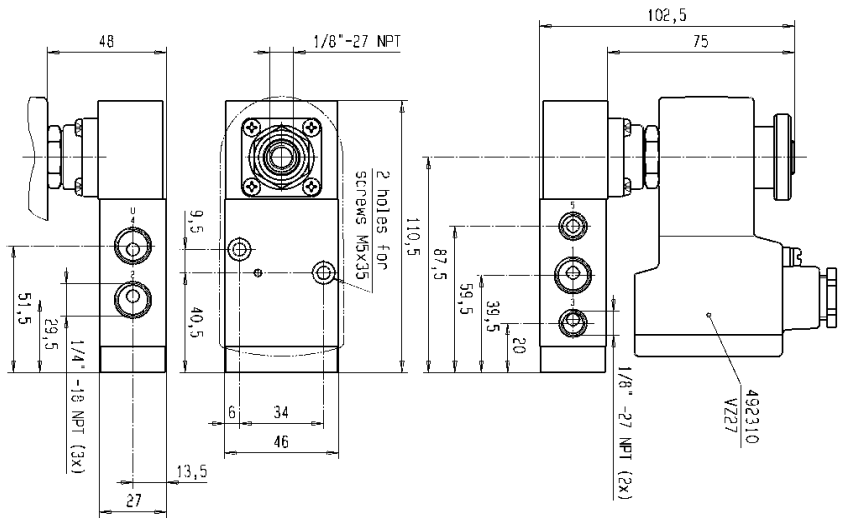

Dimension reference 7550

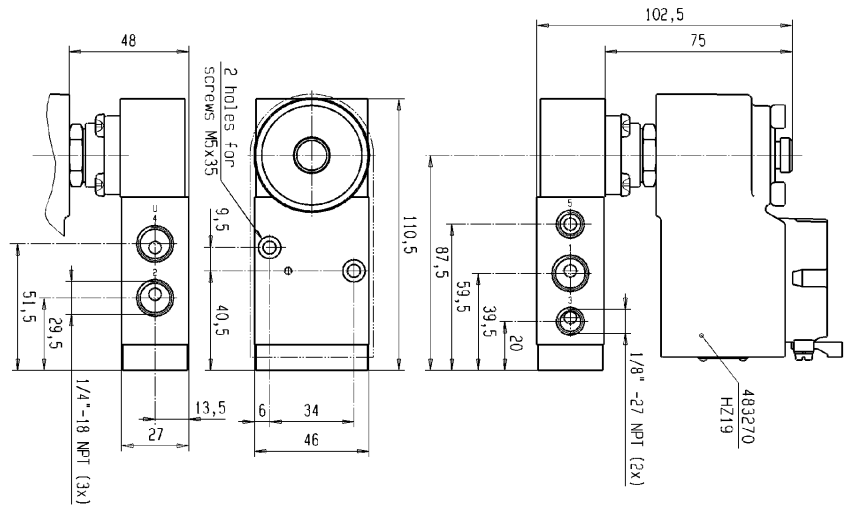

Dimension reference 7551

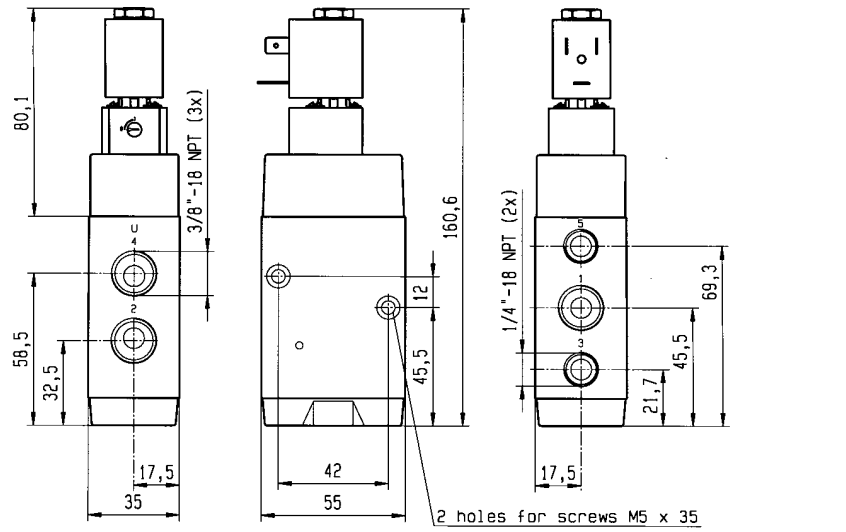

Dimension reference 7578

316L Stainless Steel valves for actuator control - 5/2 valves - Pipe connection

Port size NPT	Orifice (mm)	Flow factors (L/min Qn	Admissible differential pressure bar Min	Max DC	Max AC	Fluid temp. °C Min	Max	Seat disc	Reference numbers Global valve reference	Valve reference no.	Housing	OR Coil	Power consumption (W) DC	AC	Wt. (g)	El. Part Group *	Dim ref.

Pilot operated

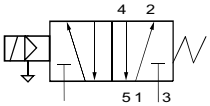

316L Stainless Steel body/Pipe mounting

3/8 - 1/4	8	1400	2	10	10	-25	80	NBR	7341PRN3NN00	**U341P3250** 1	**NL**	**481865**	9	8	-	2	7558
	8	1400	2	10	10	-25	80	NBR			**E0**	**481000**	8	8	-	2	
	8	1400	2	10	10	-25	80	NBR	7341PRN3NN92	**U341P3292** 1	**NL**	**483580.01**	0.4	-	-	7	7560
	8	1400	2	10	10	-25	75	NBR	7341PRN3NN95	**U341P3295** 1	**-**	**492965.01**	0.8	-	-	10	7561
	8	1400	2	10	10	-25	75	NBR			**-**	**492310**	6	6	-	10	

Table continued on page 302

Notes:

* See Electrical Parts Group table at end of section

1. Valve with NPT ports

316L Stainless Steel valves for actuator control - 5/2 valves - Pipe connection

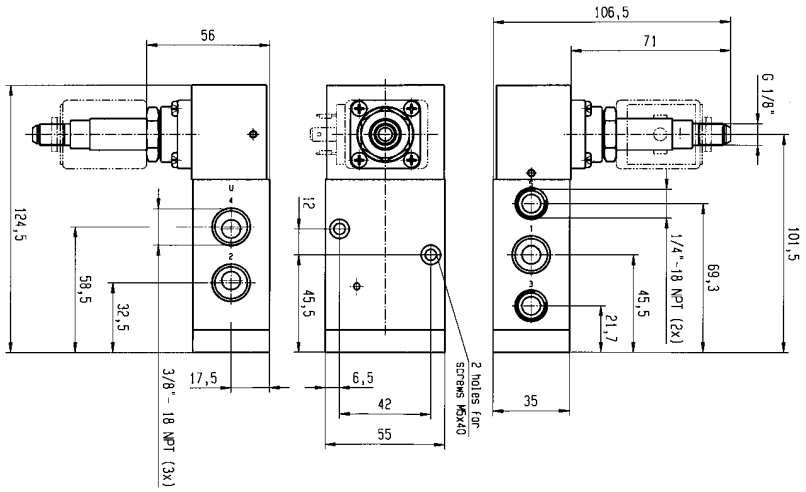

Dimension reference 7558

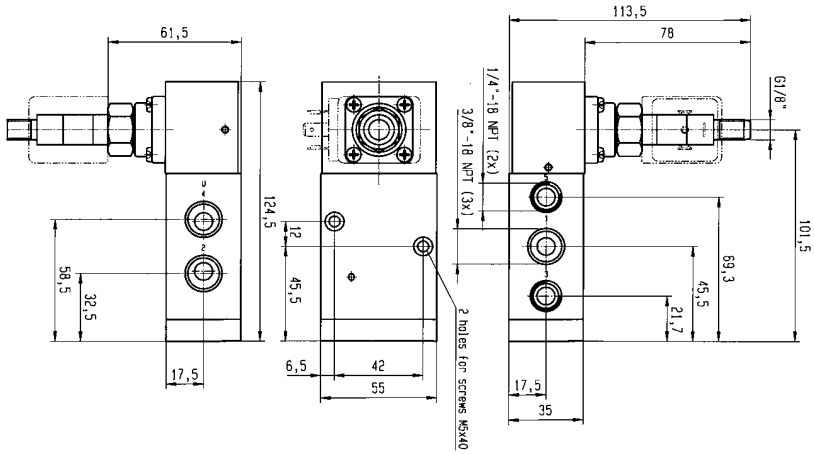

Dimension reference 7560

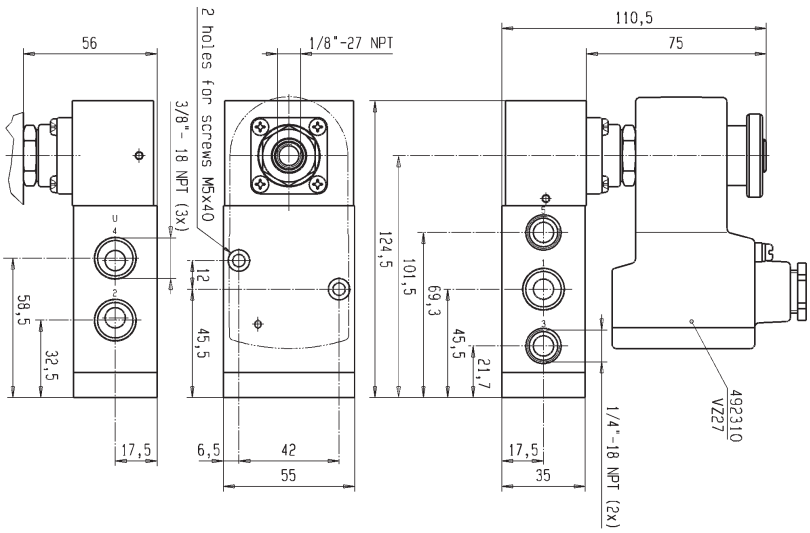

Dimension reference 7561

316L Stainless Steel valves for actuator control - 5/2 valves - Pipe connection

Port size NPT	Orifice (mm)	Flow factors (L/min Qn	Admissible differential pressure bar Min	Max DC	Max AC	Fluid temp. °C Min	Fluid temp. °C Max	Seat disc	Reference numbers: Global valve reference	Reference numbers: Valve reference no.	Reference numbers: Housing	OR Coil	Power consumption (W) DC	Power consumption (W) AC	Wt. (g)	El. Part Group *	Dim ref.
Pilot operated																	
316L Stainless Steel body/Pipe mounting																	
3/8 - 1/4	8	1400	2	10	10	-10	80	NBR	7341PRN3NN9D	**U341P32951D**	**-**	**483270**	8	8	-	11	7562
	8	1400	2	10	10	-10	80	NBR			**-**	**483270.02**	8	8	-	11	
Pilot operated with external pressure supply																	
316L Stainless Steel body/Pipe mounting																	
3/8 - 1/4	8	1400	2	10	10	-25	80	NBR	7441PRN3NN00	**U441P3250** [1]	**NL**	**481865**	9	8	-	2	7565
	8	1400	2	10	10	-25	80	NBR			**E0**	**481000**	8	8	-	2	
External pressure supply																	
316L Stainless Steel body/Pipe mounting																	
3/8 - 1/4	8	1400	2	10	10	-25	80	NBR	7541PRN3NNM1	**U541P0250** [1]	**-**	**-**	-	-	-		7566

Table continued on page 304

Notes:

* See Electrical Parts Group table at end of section

1. Valve with NPT ports

316L Stainless Steel valves for actuator control - 5/2 valves - Pipe connection

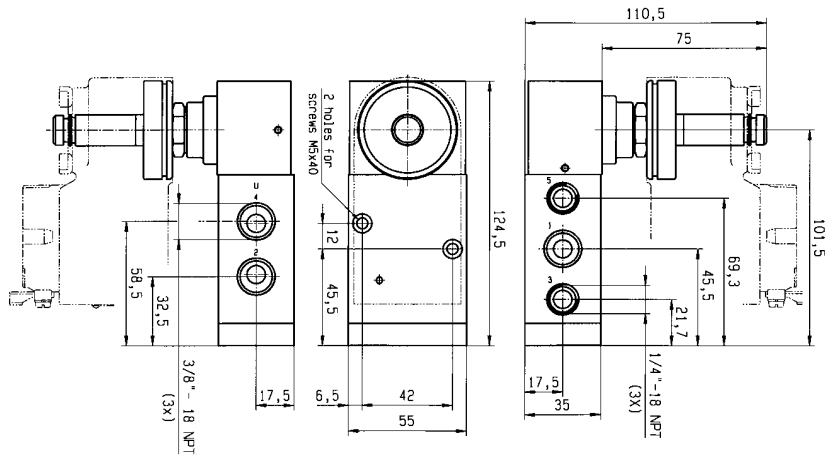

Dimension reference 7562

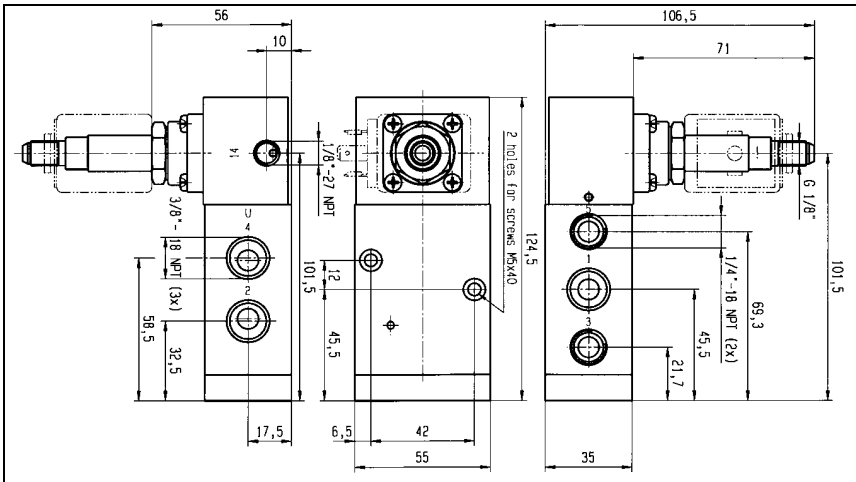

Dimension reference 7565

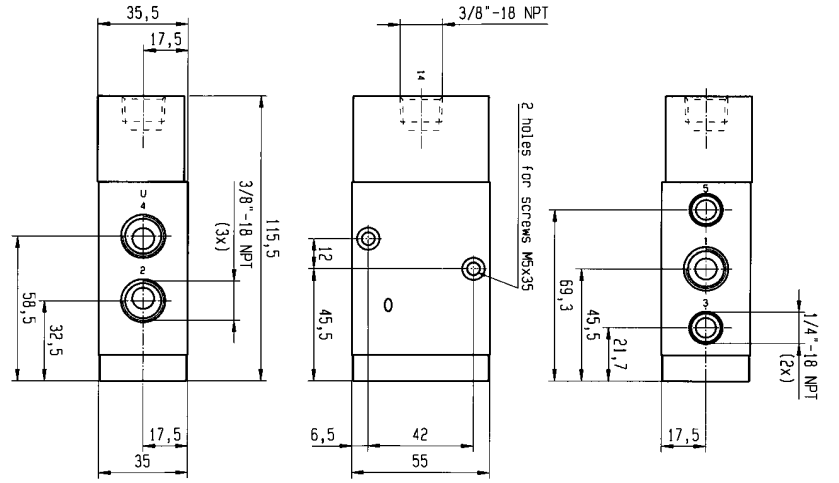

Dimension reference 7566

316L Stainless Steel valves for actuator control - 5/2 valves - Pipe connection

Port size	Orifice (mm)	Flow factors (L/min	Admissible differential pressure bar			Fluid temp. °C		Seat disc	Reference numbers					Power consumption (W)		Wt. (g)	El. Part Group *	Dim ref.
			Min	Max		Min	Max		Global valve reference	Valve reference no.		OR						
NPT		Qn		DC	AC						Housing	Coil		DC	AC			

Two solenoids and main pressure supply

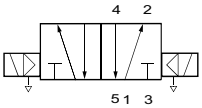

316L Stainless Steel body/Pipe mounting

1/4 - 1/8	4	600	2	10	10	-25	80	NBR	7347PRN2JN00	**U347P3150** [1]	**NL**	**481865**	9	8	-	2	7552
	4	600	2	10	10	-25	80	NBR			**E0**	**481000**	8	8	-	2	
	4	600	2	10	10	-25	65	NBR	7347PRN2JN95	**U347P3195** [1]	**-**	**492965.01**	0.8	-	-	10	7553
	4	600	2	10	10	-25	75	NBR			**-**	**492310**	6	6	-	10	
3/8 - 1/4	8	1400	2	10	10	-25	80	NBR	7347PRN3NN00	**U347P3250** [1]	**NL**	**481865**	9	8	-	2	7563
	8	1400	2	10	10	-25	80	NBR			**E0**	**481000**	8	8	-	2	

Table continued on page 306

Notes:

* See Electrical Parts Group table at end of section

1. Valve with NPT ports

316L Stainless Steel valves for actuator control - 5/2 valves - Pipe connection

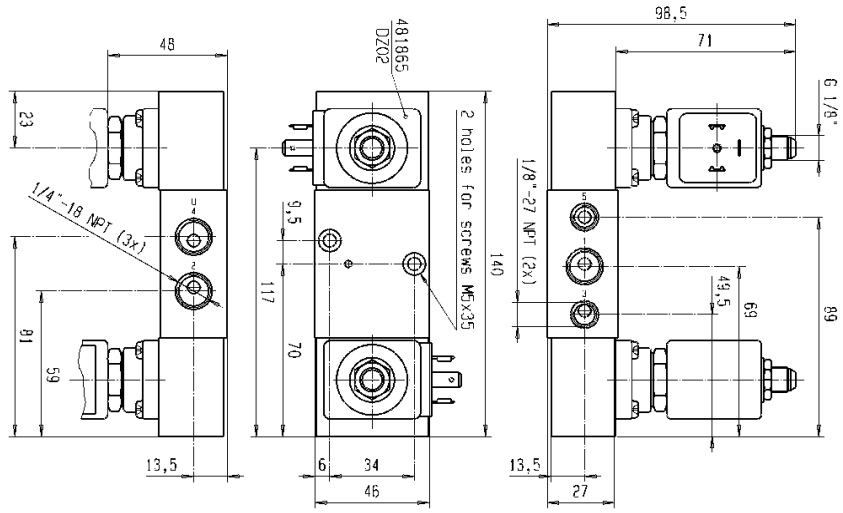

Dimension reference 7552

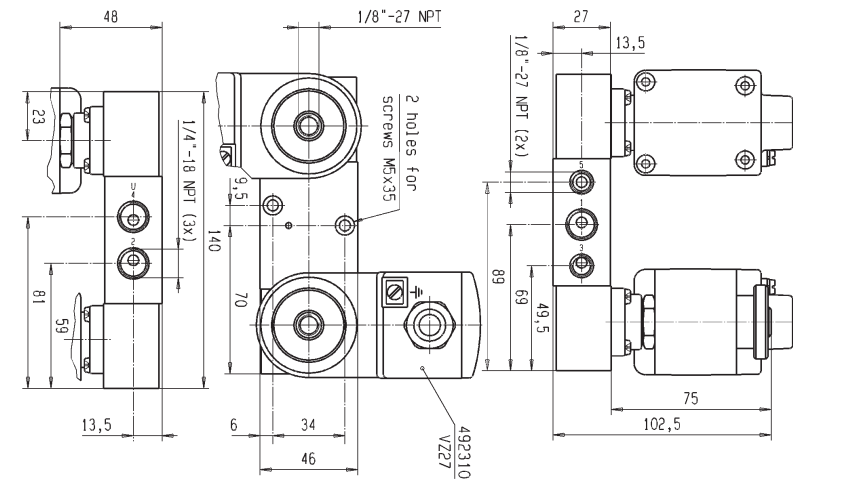

Dimension reference 7553

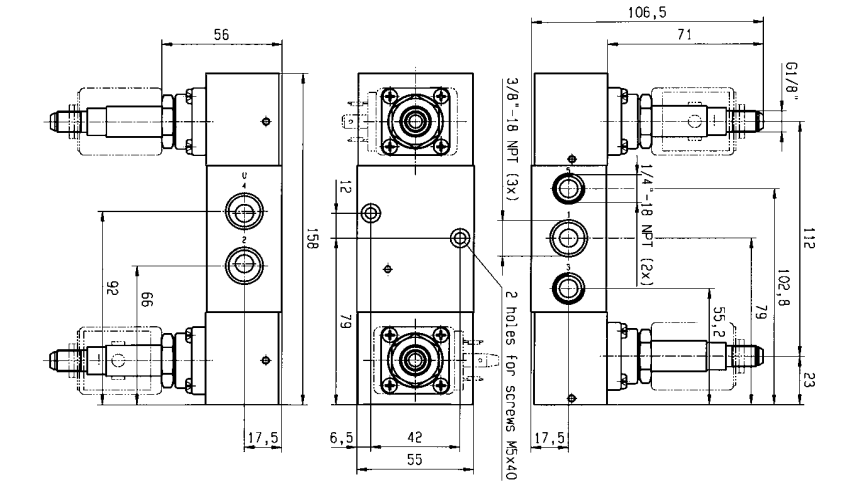

Dimension reference 7563

316L Stainless Steel valves for actuator control - 5/2 valves - Pipe connection

Port size	Orifice (mm)	Flow factors (L/min	Admissible differential pressure bar			Fluid temp. °C		Seat disc	Reference numbers				Power consumption (W)		Wt. (g)	El. Part Group *	Dim ref.
			Min	Max		Min	Max		Global valve reference	Valve reference no.	Housing	Coil	DC	AC			
NPT		Qn		DC	AC												

Two solenoids and main pressure supply

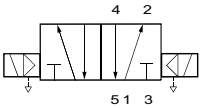

316L Stainless Steel body/Pipe mounting

3/8 - 1/4	8	1400	2	10	10	-25	75	NBR	7347PRN3NN95	**U347P3295** [1]	-	**492965.01**	0.8	-	-	10	7564
	8	1400	2	10	10	-25	75	NBR			-	**492310**	6	6	-	10	

Notes:

* See Electrical Parts Group table at end of section

1. Valve with NPT ports

316L Stainless Steel valves for actuator control - 5/2 valves - Pipe connection

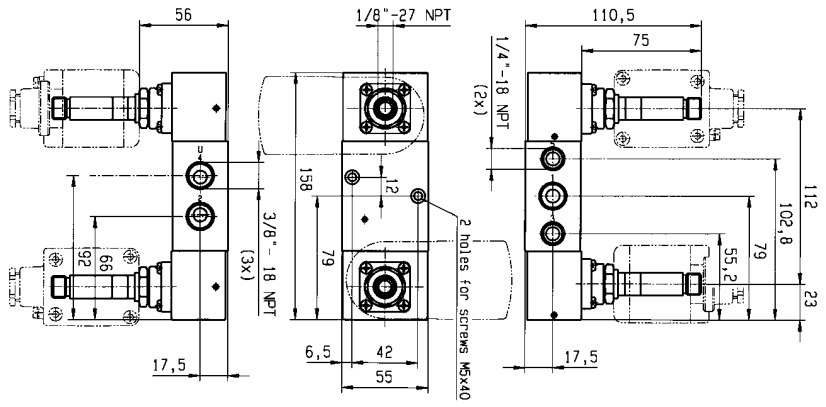

Dimension reference 7564

316L St. Steel valves for actuator control

3/2
5/2

Applications

Directional control and fail/safe function in valve actuator circuits in corrosive and hazardous environment.

Solenoid pilots for main stage valves in corrosive and hazardous locations.

Port size	Orifice (mm)	Flow factors (L/min	Admissible differential pressure bar			Fluid temp. °C		Seat disc	Reference numbers				Power consumption (W)		Wt. (g)	El. Part Group *	Dim ref.
			Min	Max		Min	Max		Global valve reference	Valve reference no.	Housing	OR Coil	DC	AC			
NPT		Qn		DC	AC												

Pilot operated - Integrated pilot

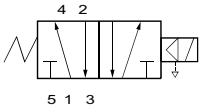

316L Stainless Steel body/NAMUR interface

1/4 - 1/8	4	600	2	10	10	-25	80	NBR	2341NRKDJNM1	**U341N0150** [1]	**A2**	**488980** [2]	2.5	2	-	1	7575

Pilot operated

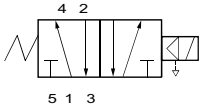

316L Stainless Steel body/NAMUR interface

1/4 - 1/8	4	600	2	10	10	-25	75	NBR	7341NRKDJN00	**U341N3150** [2]	**NL**	**481865**	9	8	-	2	7542
	4	600	2	10	10	-25	75	NBR			**E0**	**481000**	8	8	-	2	
	4	600	2	10	10	-25	80	NBR	7341NRKDJN1D	**U341N31501D** [2]	**-**	**483250**	8	8	-	5	7543

Table continued on page 310

Notes:

* See Electrical Parts Group table at end of section
1. Manual override standard
2. Valve with NPT ports

316L Stainless Steel valves for actuator control - 3/2 or 5/2 valves - NAMUR interface

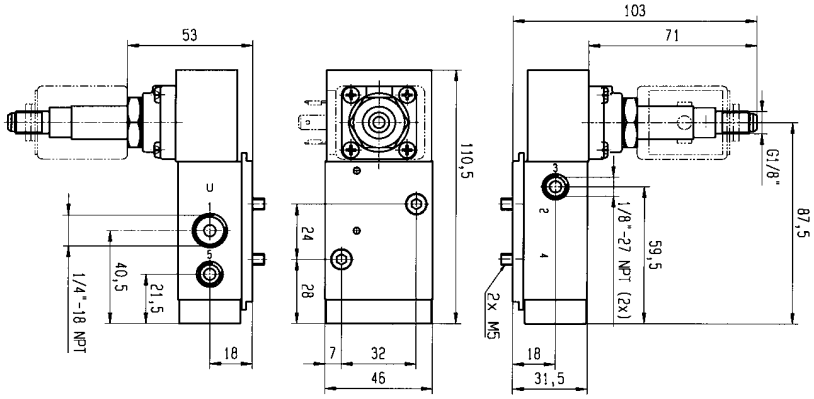

Dimension reference 7542

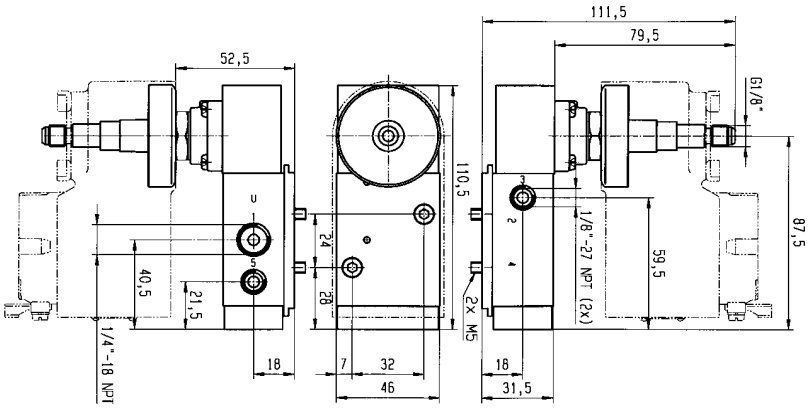

Dimension reference 7543

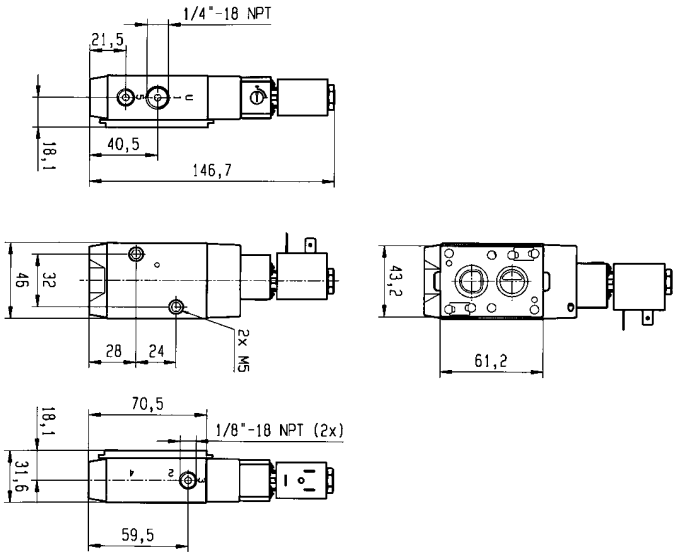

Dimension reference 7575

316L Stainless Steel valves for actuator control - 3/2 or 5/2 valves - NAMUR interface

Port size NPT	Orifice (mm)	Flow factors (L/min Qn	Admissible differential pressure bar Min	Max DC	Max AC	Fluid temp. °C Min	Max	Seat disc	Reference numbers Global valve reference	Valve reference no.	Housing	OR Coil	Power consumption (W) DC	AC	Wt. (g)	El. Part Group *	Dim ref.
Pilot operated																	
316L Stainless Steel body/NAMUR interface																	
1/4 - 1/8	4	600	2	10	10	-25	80	NBR	7341NRKDJN92	**U341N3192** 1	**NL**	**483580.01**	0.4	-	-	7	7544
	4	600	2	10	10	-25	75	NBR	7341NRKDJN95	**U341N3195** 1	**-**	**492965.01**	0.8	-	-	10	7696
	4	600	2	10	10	-25	75	NBR			**-**	**492310**	6	6	-	10	
Pilot operated - Integrated pilot																	
316L Stainless Steel body/NAMUR interface																	
3/8 - 1/4	8	1400	2	10	10	-25	80	NBR	2341NRKNNNM1	**U341N0250**	**A2**	**488980**	2.5	2	-	1	7577

Table continued on page 312

Notes:

* See Electrical Parts Group table at end of section

1. Valve with NPT ports

316L Stainless Steel valves for actuator control - 3/2 or 5/2 valves - NAMUR interface

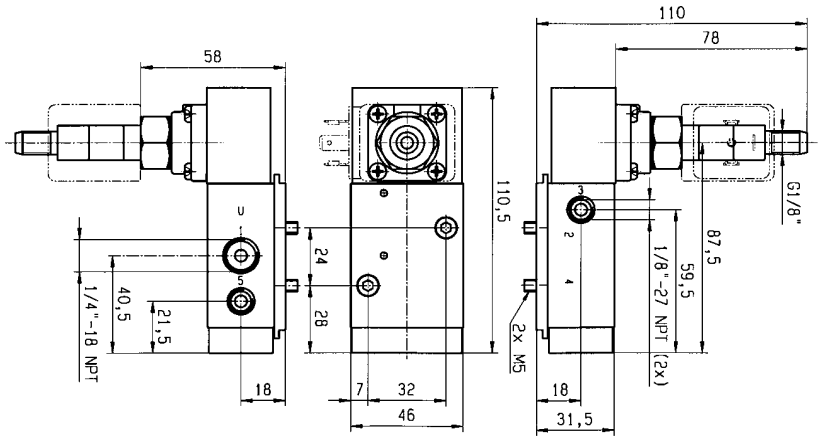

Dimension reference 7544

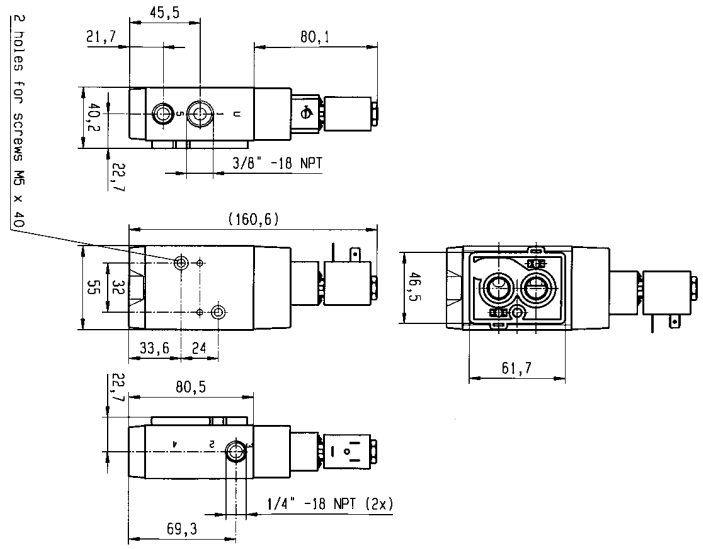

Dimension reference 7577

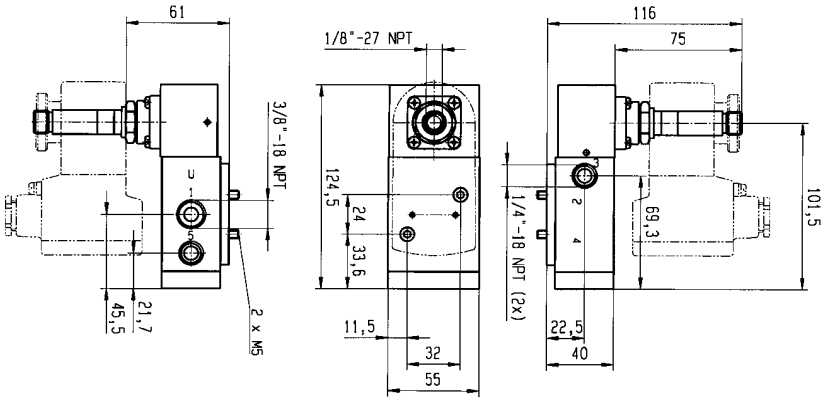

Dimension reference 7696

316L Stainless Steel valves for actuator control - 3/2 or 5/2 valves - NAMUR interface

Port size	Orifice (mm)	Flow factors (L/min	Admissible differential pressure bar			Fluid temp. °C		Seat disc	Reference numbers					Power consumption (W)		Wt. (g)	El. Part Group *	Dim ref.
			Min	Max		Min	Max		Global valve reference	Valve reference no.		OR						
NPT		Qn		DC	AC						Housing	Coil		DC	AC			

Pilot operated

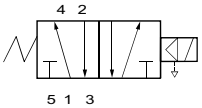

316L Stainless Steel body/NAMUR interface

3/8 - 1/4	8	1400	2	10	10	-25	80	NBR	7341NRKNNN00	**U341N3250** 1	**NL**	**481865**	9	8	-	2	7554
	8	1400	2	10	10	-25	80	NBR			**E0**	**481000**	8	8	-	2	
	8	1400	2	10	10	-25	55	NBR	7341NRKNNN92	**U341N3292** 1	**NL**	**483580.01**	0.4	-	-	7	7556
	8	1400	2	10	10	-25	75	NBR	7341NRKNNN95	**U341N3295** 1	**-**	**492965.01**	0.8	-	-	10	7695
	8	1400	2	10	10	-25	75	NBR			**-**	**492310**	6	6	-	10	

Table continued on page 314

Notes:

* See Electrical Parts Group table at end of section

1. Valve with NPT ports

316L Stainless Steel valves for actuator control - 3/2 or 5/2 valves - NAMUR interface

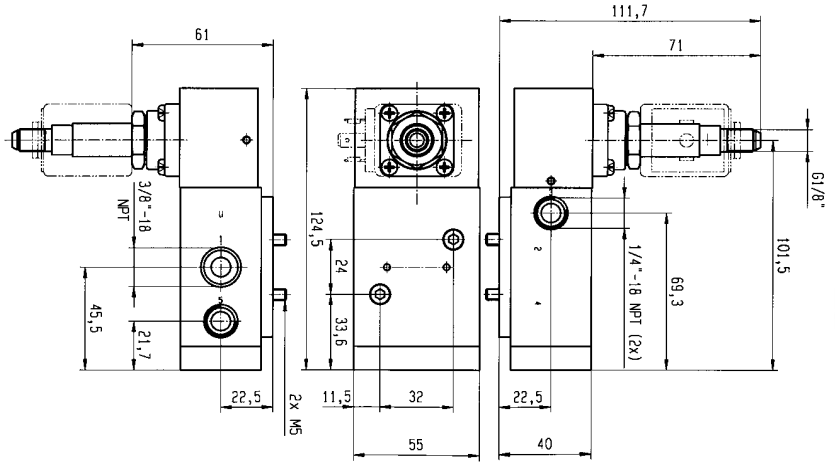

Dimension reference 7554

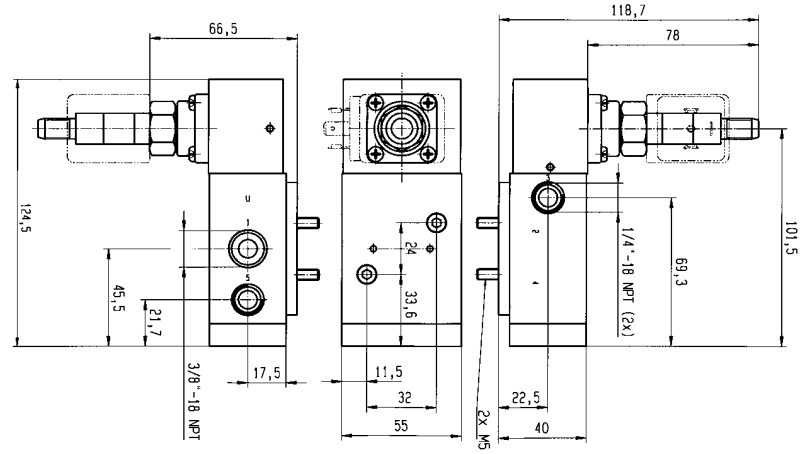

Dimension reference 7556

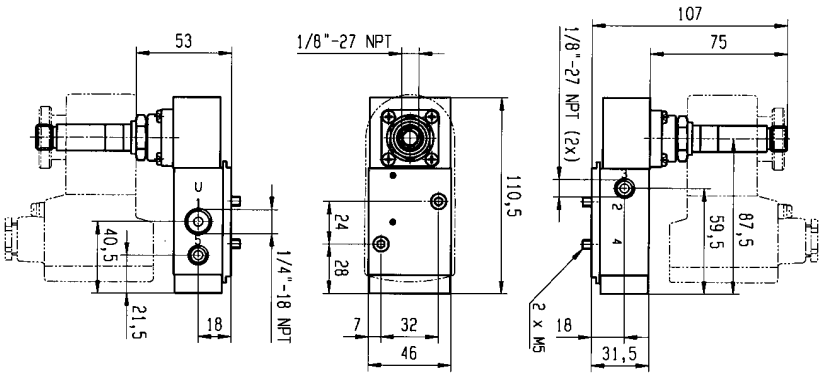

Dimension reference 7695

316L Stainless Steel valves for actuator control - 3/2 or 5/2 valves - NAMUR interface

Port size	Orifice (mm)	Flow factors (L/min	Admissible differential pressure bar			Fluid temp. °C		Seat disc	Reference numbers					Power consumption (W)		Wt. (g)	El. Part Group *	Dim ref.
			Min	Max		Min	Max		Global valve reference	Valve reference no.		OR						
NPT		Qn		DC	AC						Housing	Coil		DC	AC			

Two solenoids and main pressure supply

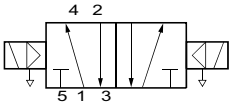

316L Stainless Steel body/NAMUR interface

1/4 - 1/8	4	400	2	10	10	-25	80	NBR	7347NRKDHNM0	**U347N3150** [1]	**NL**	**481865** [2]	9	8	-	2	7545
	4	400	2	10	10	-25	80	NBR			**E0**	**481000** [2]	8	8	-	2	
	4	400	2	10	10	-25	55	NBR	7347NRKDHN92	**U347N3192** [1]	**NL**	**483580.01** [2]	0.4	-	-	7	7546
3/8 - 1/4	8	1400	2	10	10	-25	80	NBR	7347NRKNNN00	**U347N3250** [1]	**NL**	**481865**	9	8	-	2	7557
	8	1400	2	10	10	-25	80	NBR			**E0**	**481000**	8	8	-	2	

Notes:

* See Electrical Parts Group table at end of section

1. Valve with NPT ports
2. Please order two housings and coils for each valve

316L Stainless Steel valves for actuator control - 3/2 or 5/2 valves - NAMUR interface

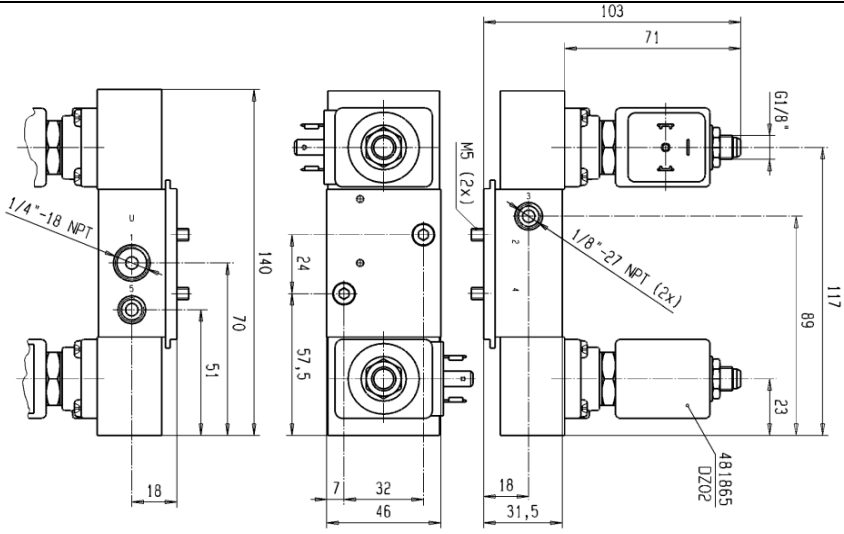

Dimension reference 7545

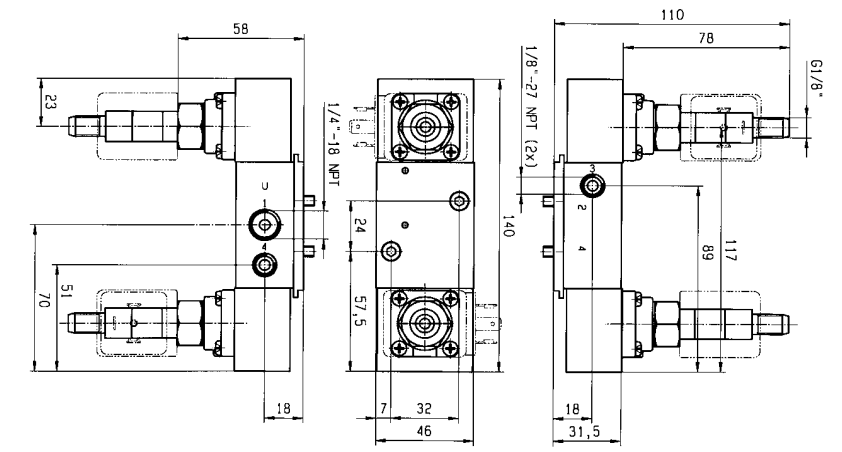

Dimension reference 7546

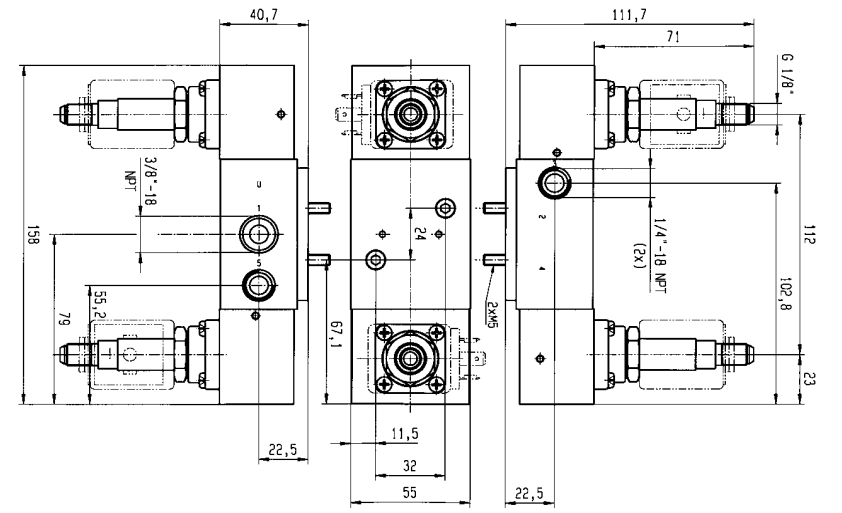

Dimension reference 7557

Electrical parts options with 3/2-5/2 - 316L Stainless steel valves for pneumatic actuator control

El.part Group	Coil	Protection class	Protection class / Temperature class	Power DC	Power AC	Coil Order No.	Coil Ref. No.	Connection	Housing Order No.	Housing Ref. No.	Ambient temp. min.	max.
1	22 mm	IP65	**Class F**	2.5	2	DA01	**488980**	for DIN B plug	A2	**8993**	-40	50
		IP65	**Class F**	2.5	2	DA02	**481045**	with DIN B plug	A2	**8993**	-40	50
		IP65	**EEx m II T5**	2.5	2	VA12	**482606.10**	with 1500mm cable	00	**-**	-40	50
2	32 mm (Std)	IP65	**Class F**	9	8	DZ02	**481865**	for DIN A plug	NL	**8132**	-40	50
		IP65	**Class F**	9	8	DZ03	**482725**	with DIN A plug	NL	**8132**	-40	50
		IP65	**Class H**	9	8	DZ04	**492453**	for DIN A plug	NL	**8132**	-40	50
		IP65	**Class H**	9	8	DZ05	**492726**	with DIN A plug	NL	**8132**	-40	50
		IP65	**Class F, 50/60 Hz**	-	9	DZ06	**483510**	for DIN A plug	NL	**8132**	-40	50
		IP65	**Class F, 50/60 Hz**	-	9	DZ07	**482635**	with DIN A plug	NL	**8132**	-40	50
		IP65	**EEx m II T4**	9	8	HZ90	**492670.10**	with 3000mm cable	00	**-**	-25	40
	50 mm (Std)	IP10/IP44	**Class F**	8	8	EZ01	**481000**	screw-terminals	E0	**4270**	-40	50
		IP10/IP44	**Class H**	8	8	EZ02	**485100**	screw-terminals	E0	**4270**	-40	50
		IP67	**Class F, IP 67, M20x1.5**	8	8	EZ01	**481000**	screw-terminals	G1	**4538**	-40	50
		IP65	**EEx m II T4/T5**	9	8	VZ01	**492070**	with 1500mm cable	00	**-**	-40	40/65
		IP67	**EEx me II T4**	8	8	HZ06	**483371**	for cable connection	00	**-**	-40	65
		IP66	**EEx me II T3/T4**	11	9	VZ90	**492190.10**	for cable connection	00	**-**	-40	75/40
		IP67	**EEx me II T3/T4**	8	8	HZ23	**494040**	for cable connection	00	**-**	-40	90/65
		IP65	**EEx md IIC T4/T5**	8	8	HZ09	**493640**	with 1500mm cable	00	**-**	-40	75/40
5	50 mm	IP54	**EEx d IIC T4/T5/T6**	8	8	HZ08	**483250**	for cable, 1/2 NPT	00	**-**	-40	80/75/60
7	32 mm I.S.	IP65	**EEx ia II C T6**	0.4	-	DZ12	**483580.01**	for DIN A plug	NL	**8132**	-40	55
		IP65	**EEx ia II C T6**	0.4	-	DZ13	**483960.01**	with DIN A plug	NL	**8132**	-40	55
	50 mm I.S.	IP66	**EEx ia II C T6**	0.4	-	VZ93	**494035.10**	for cable connection	00	**-**	-40	65
		IP67	**EEx ia II C T6**	0.4	-	VZ08	**488660.01**	with 2000mm cable	00	**-**	-40	65
		IP65	**EEx ia II C T6**	0.4	-	VZ09	**488670.01**	with DIN A plug	00	**-**	-40	65
9	32 mm	IP65	**Class F**	9	9	DZ93	**492387**	with DIN A plug	N9	**8886**	-40	50
	50 mm	IP66	**EEx me II T5/T6**	1.5	-	VZ13	**492200**	for cable connection	00	**-**	-40	75/40
		IP67	**EEx me II T4**	8	-	VZ14	**483371.01**	for cable connection	00	**-**	-40	65
CPR		IP66	**EEx me II T4/T5**	6	6	VZ15	**492300**	for cable connection	00	**-**	-40	75/40
		IP67	**EEx m II T4/T5**	5	5	VZ02	**492270**	with 1500mm cable	00	**-**	-40	65/40
		IP65	**EEx ib IIB T6**	0.8	-	VZ11	**482660**	for cable connection	00	**-**	-40	75
		IP66	**EEx ib IIC T6**	0.8	-	VZ12	**483330.01**	for cable connection	00	**-**	-40	75
		IP66	**EEx ia IIC T6**	0.8	-	VZ92	**492965.02**	for cable connection	00	**-**	-40	65
10	50 mm	IP66	**EEx me II T5/T6**	1.5	-	VZ26	**492210**	for cable connection	00	**-**	-40	75/40
		IP66	**EEx me II T4/T5**	6	6	VZ27	**492310**	for cable connection	00	**-**	-40	75/40
OFFSHORE		IP65	**EEx ib IIB T6**	0.8	-	VZ11	**482660**	for cable connection	00	**-**	-40	75
		IP66	**EEx ib IIC T6**	0.8	-	VZ12	**483330.01**	for cable connection	00	**-**	-40	75
		IP66	**EEx ia IIC T6**	0.8	-	VZ91	**492965.01**	for cable connection	00	**-**	-40	65
11	50 mm	IP65	**EEx d II C T4/T5/T6**	8	8	HZ19	**483270**	for cable , M20x1.5	00	**-**	-40	80/75/60
	EEx d	IP65	**EEx d II C T4/T5/T6**	8	8	HZ21	**483270.02**	for cable , 1/2 NPT	00	**-**	-40	80/75/60
12	50 mm	IP66	**EEx me II T4/T5**	6	6	VZ27	**492310**	for cable connection	00	**-**	-40	75/40
		IP66	**EEx ia IIB T6**	0.8	-	VZ22	**482160.01**	for cable connection	00	**-**	-40	65
		IP66	**EEx ia IIC T6**	0.8	-	VZ23	**482870.01**	for cable connection	00	**-**	-40	65

Note: This table is indicative only. Please contact your distributor to confirm your selection.

EExPress™

EEx p [ia] m IIC T5
Bus Manifold for
Pneumatic actuator control

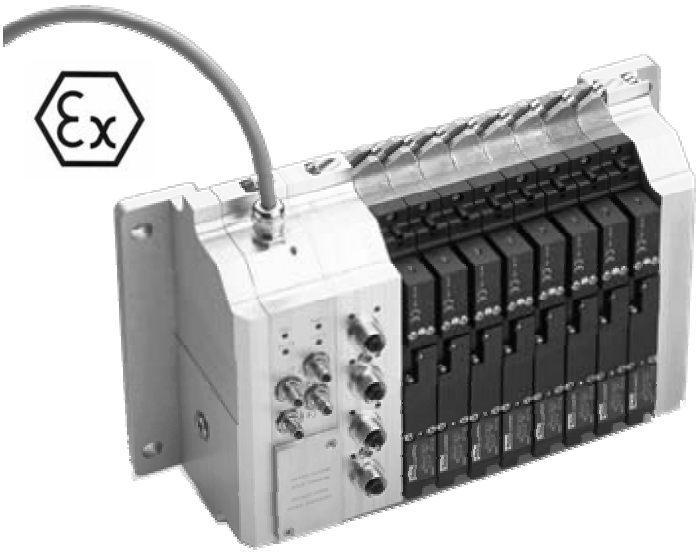

Parker Lucifer has developed industry's first fully integrated fieldbus manifold system – the patented EExPress™ Bus Manifold – for the control of pneumatic actuators in hazardous (Zone 1 and Zone 2) process industry environments like chemical, petrochemical applications. The EExPress™ Bus Manifold is a stackable valve system that fully integrates 5/2 solenoid valves, control electronics and input sensors, a unique feature on the market today, and uses the Profibus DP fieldbus communications protocol – the preferred protocol of the process industries. One bus address can operate up to 32 individual 5/2 modular solenoid valves, or a combination of valves and actuator position sensors.
The concept consists in an "integrated solution" which permits to install the manifold close to the pneumatic actuators - without the need for expensive explosion-proof pressurised cabinets. The **EEx p [ia] m IIC T5** protection is reached by using a "safety pressure" - the complete block is put under 50 mb safety pressure. This permits a substantial reduction of installation and maintenance costs, a simplification of the electrical connections, the use of Profibus DP and offers increased safety due to separated wiring of communication and power supply.

For more information see brochure 8752/GB

1. PRODUCT INTRODUCTION

The EExPress™ bus Manifold is a patented stackable system composed of:

- 1 x End plates Kit
- X x Solenoid valve module
- X x Input sensor module
- 1 x Gateway

The EExPress™ Explosion-proof manifold 5/2 valve island design uses the **EEx [ia] pm protection.**

Up to 32 valves per island require one bus address only.

The system includes a bus part satisfying the intrinsic safety requirements and communicating directly with a master control unit by using the Profibus DP protocol.

The manifold assembly and the dedicated power supply are coping with the "p" protection. The galvanic separation between the EEx ia zone and the EEx p is assured by opto-coupler and by a transformer.

The valve coils are coping with the ìmî protection.

2. APPLICATIONS

This smart EExPress™ bus manifold package has been designed for the control of pneumatic actuators in Process Industries with **hazardous environments Zone 1 or Zone 2** such as:

- Ghemical & Pharmaceutical.
- Gas and solvant handling
- Powder transportation.
- Refining.
- Etc.

These high demanding markets are concerned with:

- Process & people safety
- Plant installation simplification
- Process productivity
- Friendly use product
- Partners support

3. PRODUCT CONFIGURATION

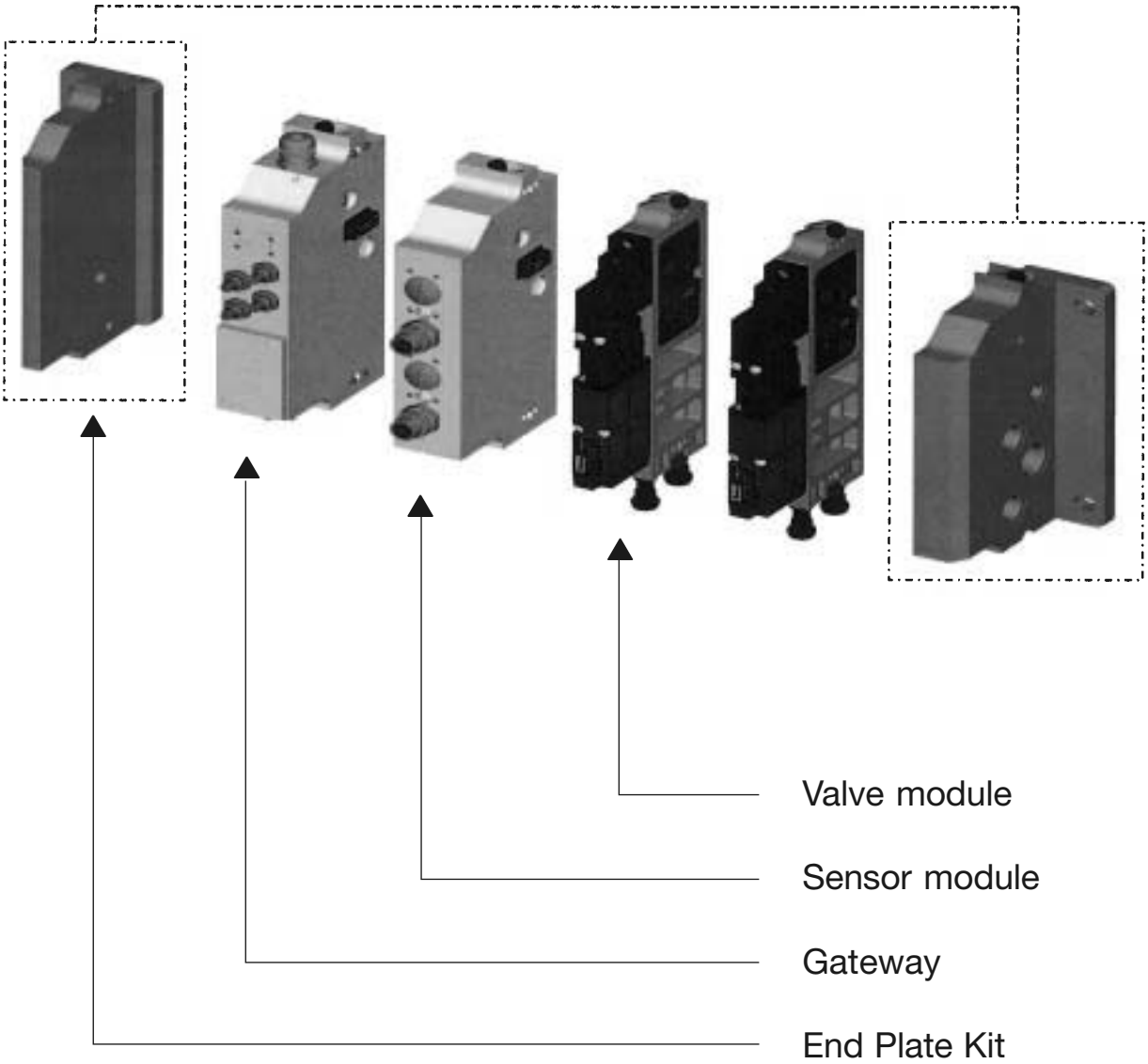

5. PRODUCT OPERATING PRINCIPLE

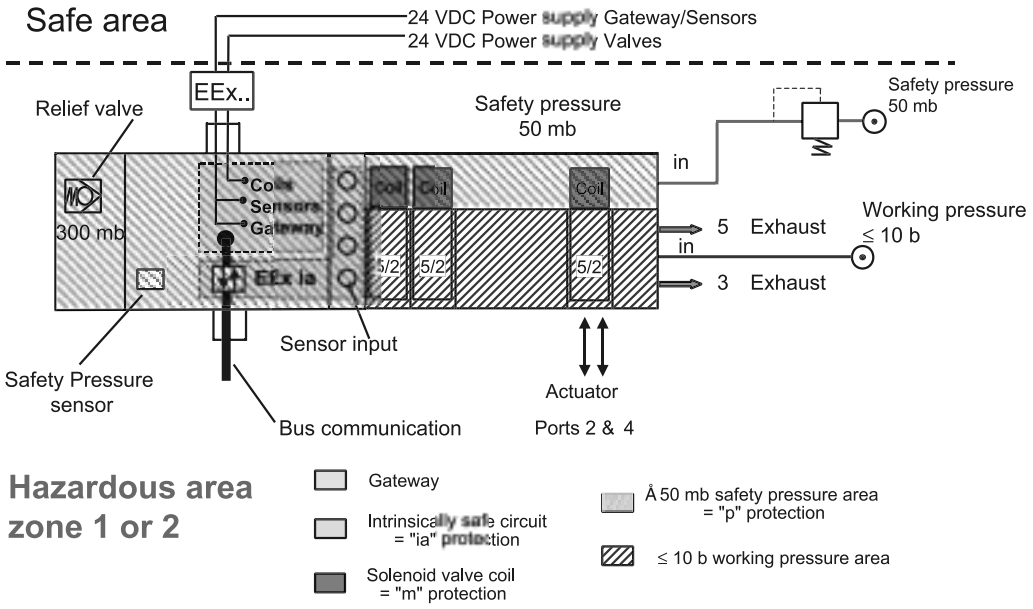

Power supply

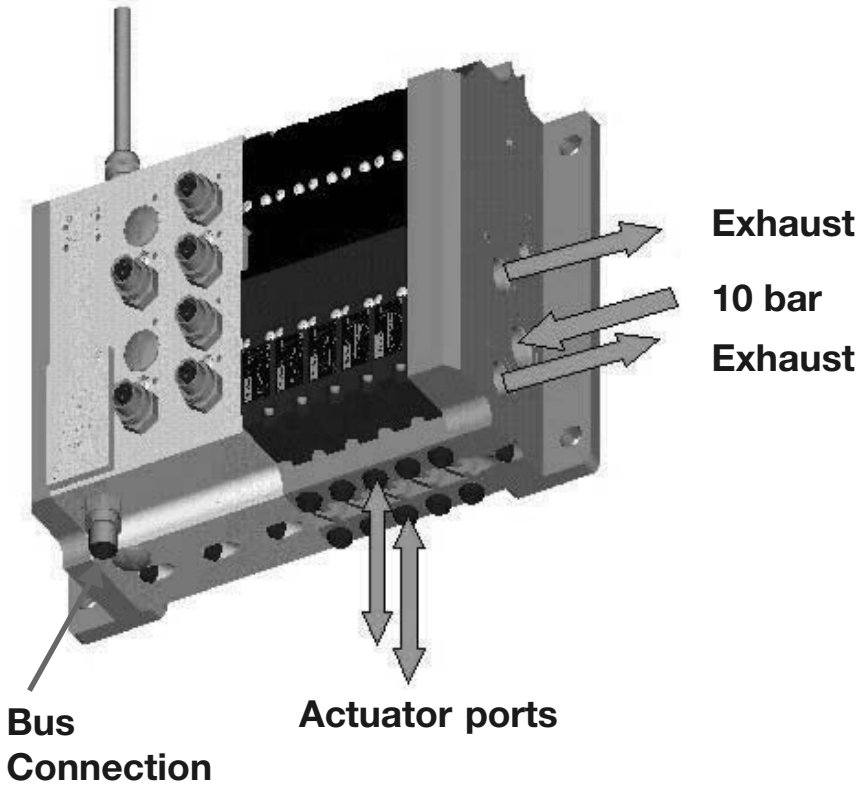

HOW TO ORDER ASSEMBLED MANIFOLDS

21.2 Choose the components for 1 manifold in the following order:

1 - Plate kit **N.B. One** plate kit only per manifold				
End plate A	*Pressure supply plate B*		*Order No.*	*Qty*
BSP	BSP		495190	1
2 - Gateway selection **N.B. One** gateway only per manifold				
Protocol	*Communication link*		*Order No.*	*Qty*
Profibus DP	Copper (1 connector)		495176	1
Profibus DP	Copper (1 connectors + 1 repeater)		495275	1
Profibus DP	Optical fibre		493972	1
3 - Sensor modules **N.B.** 0 up to 8 sensor modules per manifold				
Nb of connectors	*Connection*	*ON/OFF*	*Order No.*	*Qty**
2x IN connectors	M 12	x	495141	0 to 8
4x IN connectors	M 12	x	495142	0 to 8
4 - Valve modules **N.B.** 0 up to 32 valve modules per manifold			*Order No.*	*Qty*
Module with 5/2 valves			494237	0 to 32

*** Warning:** For one bus address, the combination sensor module + valve module has to fit the following formula: *4× (Number of sensor modules with 2× IN connectors + Number of sensor modules with 4× IN connectors) + Number of valve modules < 32.*

21.3 Example of manifold configuration and order:

Description	**Order No. chosen**	**Qty per Manifold chosen**
Plate Kit	495190	1
Gateway	495176	1
Sensor module – 2 IN connectors	495141	4
Sensor module – 4 IN connectors	–	–
Valve module	494237	8

Order: 5 manifold with above mentioned components.
The selected components will be supplied as an assembled manifold.
A – The label on the manifold shows:
1. The LCIE conformity for the EEx ia pm protection.
2. The LCIE approval code: EM followed by a manufacturing code. I.e. **EM 12345**

B – Each manufacturing code defines a specific manifold configuration
C – The **EM XXXXX** is also mentioned on the shipping bulletin and on the invoice
D – To simplify, customers can re-order the same manifold by using the **EM XXXXX** code mentioned on these documents.

Index by reference numbers

Valve reference number - global reference number

Valve reference	Global valve ref.	Page
U 033X5156	7033XRN2SN00	274/294
U 033X51561D	7033XRN2SN1D	274/292
U 033X5256	7033XRN3SN00	276/294
U 033X52561D	7033XRN3SN1D	274/294
E 121F43	7121FBF4NF00	14/88
E 121F4302	7121FBF4NV00	14/50
E 121F44	7121FBF4GF00	14/88
E 121F4406	7121FBF4GV00	14/50
121F47	7121FBF4LF00	14
121F4706	7121FBF4LV00	14/50
121F63	7121FBF4LR00	14/88
121F64	7121FBF4NR00	14/88
121F67	7121FBF4GR00	14/88
121G2320	7121GBG34VT0	104
121G2520	7121GBG45VT0	104
121G2523	7121GBG45VT1	104
121K01	7121KBG2SV00	12/48
121K0103	7121KBG2SE00	72
121K0150	7121KBG2SVMO	10/48
121K02	7121KBG2QV00	10/48
121K0250	7121KBG2QVM0	10/48
E 121K03	7121KBG2NF00	10/86
E 121K0302	7121KBG2NV00	10/46
121K0323	7121KBG2NE00	72
E 121K0352	7121KBG2NVM0	10/46
E 121K04	7121KBG2GF00	10/86
E 121K0402	7121KBG2GV00	8/46
E 121K07	7121KBG2LF00	10
121K0706	7121KBG2LV00	10/46
121K0756	7121KBG2LVM0	10/46
121K1302	7121KBG1NV00	8
121K1352	7121KBG1NVM0	8/46
E 121K14	7121KBG1GF00	8/86
E 121K23	7121KBG1LR00	8/86/102
121K2423	7121KBG1NRT0	104
121K3106	7121KBG3SV00	12/48/104
121K3206	7121KBG3QV00	12/48/104
121K3303	7121KBG3UE00	72
121K3306	7121KBG3UV00	12/48/104
E 121K45	7121KBG44V00	12/48
E 121K4503	7121KBG44E00	72
E 121K46	7121KBG42V00	12/48
E 121K4603	7121KBG42E00	72
121K6220	7121KBG2QRT0	106
E 121K63	7121KBG2LR00	10/86/104
E 121K64	7121KBG2NR00	10/86/104
121K6423	-	104/104
E 121K65	7121KBG2ER00	8/86/104
E 121K67	7121KBG2GR00	10/86/104
121M13	-	8/46
121M14	-	8/46
121V5106	7121VVG2SV00	118
121V51061D	7121VVG2SV1D	118
121V5112	7121VVG2ST00	118
121V5163	7121VVG2SR00	74/118

Valve reference	Global valve ref.	Page
121V5206	7121VVG2QV00	116
121V5212	7121VVG2QT00	116
121V5263	7121VVG2QR00	74/116
121V5306	7121VVG2NV00	116
121V53061D	7121VVG2NV1D	116
121V5363	7121VVG2NR00	74/116
121V5406	7121VVG2GV00	116
121V5463	7121VVG2GR00	74/116
121V5706	7121VVG2LV00	116
121V5763	7121VVG2LR00	74/116
122K83	7122KBG2LF00	12
122K8306	7122KBG2LV00	12/48
122K8321	7122KBG2LRT0	106
122K8363	7122KBG2LR00	12/88/106
122K84	7122KBG2GF00	12/88
122K8406	7122KBG2GV00	12/48
122K8408	7122KBG2GR00	12/88
122K9321	7122KBG1LRT0	106
122K9363	7122KBG1LR00	12/88/106
125K01	7125KBG2SV00	14/50
125K03	7125KBG2NF00	12
E 131E03	7131EBG2LN00	130/228
E 131F26	7131FDF2JV00	148
E 131F43	7131FBF4LV00	144
E 131F4350	7131FBF4LVM0	144
E 131F44	7131FBF4GV00	144
E 131F4450	7131FBF4GVM0	144
131F4480	7131FBF4GLV5	140
131F4490	-	136
131F46	7131FBF4JV00	144
131F4650	7131FBF4JVM0	144
U 131F5695	7131FRF2LV95	276/292
U 131F56951D	7131FRF2LV1D	278
E 131K03	7131KBG2LV00	128
E 131K03001D	7131KBG2LV1D	228
E 131K0308	7131KBG2LP00	130/228
E 131K03081D	7131KBG2LP1D	130/228
E 131K0350	7131KBG2LVM0	128/228
E 131K0358	7131KBG2LPM0	130/228
E 131K04	7131KBG2GV00	126/226
E 131K0450	7131KBG2GVM0	126/226
131K0480	7131KBG2GVL5	126/226
131K0490	7131KBG2CV90	126/226
131K05	7131KBG2BF00	176
E 131K06	7131KBG2JV00	126/226
E 131K06081D	7131KBG2JP1D	128/228
E 131K0650	7131KBG2JVM0	126/226
E 131K13	7131KBG1LV00	124
E 131K14	7131KBG1GV00	124
131K16	7131KBG1JV00	124
131K1650	7131KBG1JVM0	124
E 131K63	7131KBG2LR00	130
E 131K6350	7131KBG2LRM0	130
E 131K64	7131KBG2ER00	126
E 131K6450	7131KBG2ERM0	126

Valve reference	Global valve ref.	Page
131K65	7131KBG2BR00	176
131M14	-	124/226
131M15	-	124/226
131M74	-	142
131M7450	-	142
131M75	-	138
131M7550	-	138
131T21	7131TBG2RV00	132
131T2101	7131TBG2RVM0	132
131T22	7131TBG2NVA0	132
131T23	7131TBG2JV00	126
131T2301	7131TBG2JVM0	126
131T29	7131TBG2LV00	128
131T2901	7131TBG2LVM0	128
131V5306	7131VVG2LV00	182
131V5363	7131VVG2LR00	182
131V5406	7131VVG2GV00	182
131V5463	7131VVG2GR00	182
131V5490	-	182
131V65	7131WVG2BR00	176
131X1101	7131XAKLVN00	230
U 131X1201	7131XRKMVN00	276/292
132F43	7132FBF4LV00	144
132F44	7132FBF4GV00	144
132F46	7132FBF4JV00	144
132K03	7132KBG2LV00	132
132K04	7132KBG2GV00	132
132K06	7132KBG2JV00	132
132T22	7132TBG2NVA0	134
132T23	7132TBG2JV00	132
132T2301	7132TBG2JVM0	132
132T29	7132TBG2LV00	132
E 133F43	7133FBF4LV00	146
E 133F4350	7133FBF4LVM0	144
E 133F44	7133FBF4GV00	144
E 133F4450	7133FBF4GVM0	144
133F46	7133FBF4JV00	144
133F4650	7133FBF4JVM0	144
E 133K03	7133KBG2LV00	134
E 133K0350	7133KBG2LVM0	134
E 133K04	7133KBG2GV00	134
E 133K04001D	7133KBG2GV1D	134
E 133K0450	7133KBG2GVM0	134
E 133K05	7133KBG2BV00	176
E 133K06	7133KBG2JV00	134
E 133K0650	7133KBG2JVM0	134
E 133K13	7133KBG1LV00	134
E 133K14	7133KBG1GV00	134
E 133K16	7133KBG1JV00	134
133T21	7133TBG2NV00	134
133T2101	7133TBG2NVM0	134
133T23	7133TBG2JV00	134
133T2301	7133TBG2JVM0	134
133V5306	7133VVG2LV00	182
133V5363	7133VVG2LR00	182

Valve reference number - global reference number

Valve reference	Global valve ref.	Page
133V5406	7133VVG2GV00	182
133V5463	7133VVG2GR00	182
U 133V5695	7133VRN2LV95	278/288
U 133V56951D	7133VRN2LV9D	278/288
133X01	-	230
U 133X5156	7133XRN2SV00	280/290
U 133X51561D	7133XRN2SV1D	280/288
U 133X5196	7133XRN2VN96	280
U 133X51961D	7133XRN2VN9H	280
U 133X5296	7133XRN3SN96	282/290
U 133X52961D	7133XRN3SN9H	282/290
135K03	7135KBG2LV00	136/228
135K04	7135KBG2GV00	136/228
221G13	7221GBG3VN00	16/52/64
221G1303	7221GBG3VE00	76
221G1330	7221GBG3VNH0	16/52/64
221G15	7221GBG4VN00	16/52/64
221G1503	7221GBG4VE00	76
221G1530	7221GBG4VNH0	16/52/64
221G16	7221GBG51N00	18/52
221G1603	7221GBG51E00	76
221G1610	7221GBG51NC0	64
221G1630	7221GBG51NH0	18/52
221G1631	7221GBG51NCH	64
221G17	7221GBG61N00	18/52
221G1703	7221GBG61E00	76
221G1710	7221GBG61NC0	64
221G1730	7221GBG61NH0	18/52
221G1731	7221GBG61NCH	64
221G21	7221GBG64N00	18/54
221G2103	7221GBG64E00	76
221G2106	7221GBG64V00	18
221G2110	7221GBG64NC0	64
221G2130	7221GBG64NH0	18/52
221G2131	7221GBG64NCH	64
221G2136	7221GBG64VHO	18
221G23	7221GBG3VV00	16
221G2330	7221GBG3VVH0	16
221G25	7221GBG4VV00	16
221G25001D	7221GBG4VV1D	16
221G2530	7221GBG4VVH0	16
221G26	7221GBG51V00	18
221G26001D	7221GBG51V1D	16
221G2630	7221GBG51VH0	18
221G27	7221GBG61V00	18
221G27001D	7221GBG61V1D	18
221G2730	7221GBG61VH0	18
221G5303	72218RG3TE00	78
221G5306	72218RG3TV00	20/54
221G5503	72218RG4UE00	78
221G5506	72218RG4UV00	20/54
221G5603	72218RG5VE00	78
221G5606	72218RG5VV00	20/54
221J3301E	-	118
222G3303	72228BG3TES0	78
222G3306	72228BG3TV00	20/54
222G3503	72228BG4UES0	78
222G3506	72228BG4UV00	20/54

Valve reference	Global valve ref.	Page
222G3603	72228BG5VES0	78
222G3606	72228BG5VV00	20/54
222G5303	72228RG3TE00	78
222G5306	72228RG3TV00	20/54
222G5503	72228RG4UE00	78
222G5506	72228RG4UV00	20/54
222G5603	72228RG5VE00	78
E 321F32	7321FBF3TN00	34/60/92
E 321F3202	7321FBF3TV00	34/92/110
E 321G36	7321GBG53N00	24/56
E 321G3606	7321GBG53V00	24
E 321G3610	7321GBG53NMC	66
E 321G37	7321GBG64N00	26/58
E 321G3706	7321GBG64V00	24
E 321G3710	7321GBG64NMC	66
E 321G37101D	7321GBG64N1D	26
321G3790	-	26
E 321G38	7321GBG76N00	26/58
E 321G3806	7321GBG76V00	26
E 321G3810	7321GBG76NMC	68
E 321G39	7321GBG88N00	28/58
E 321G3906	7321GBG88V00	26
E 321G3910	7321GBG88NMC	68
E 321G39101D	7321GBG88N3D	28
321G3990	-	26
E 321G40	7321GBG99N00	30/58
E 321G4006	7321GBG99V00	28
E 321G4010	7321GBG99NMC	68
E 321G40101D	7321GBG99N3D	30
321G4090	-	28
321G8312	73218BG3TTS0	80
321G8512	73218BG4UTS0	80
321G8612	73218BG5VTS0	80
321G8712	73218BG64TS0	82
321G8812	73218BG75TS0	82
321G8912	73218BG87TS0	82
E 321H11	7321HBG2SN00	22/90
E 321H13	7321HBG3TN00	22/90
E 321H15	7321HBG4UN00	24/90
321H1590	-	22
E 321H21	7321HBG2SV00	22/90/108
E 321H23	7321HBG3TV00	22/90/108
321H2322	7321HBG3TVT0	108
E 321H25	7321HBG4UV00	22/90/108
321H2522	7321HBG4UVT0	108
321K31	-	22/56
321K3106	-	22
321K33	-	22/56
321K3306	-	22
321K35	-	22/56
321K3506	-	22
321K36	-	24/56
321K3606	-	24
321K37	-	24/56
321K3706	-	24
321K4103	7321KBG2SEW0	80
321K4106	7321KBG2SVW0	66
321K4156	7321KBG2SVMW	66

Valve reference	Global valve ref.	Page
321K4303	7321KBG3TEW0	80
321K4306	7321KBG3TVW0	66
321K4356	7321KBG3TVMW	66
321K4503	7321KBG4TEW0	80
321K4506	7321KBG4TVW0	66
321K4556	7321KBG4TVMW	66
321K4603	7321KBG51EW0	80
321K4606	7321KBG51VW0	66
321K4656	7321KBG51VMW	66
321K4703	7321KBG62EW0	80
321K4706	7321KBG62VW0	66
321K4756	7321KBG62VMW	66
322F72	7322FBF3TN00	34/60/92
322F7206	7322FBF3TV00	34/92/110
322G36	7322GBG53N00	32/58
322G3606	7322GBG53V00	32
322G3610	7322GBG53NC0	68
322G37	7322GBG64N00	32/60
322G3706	7322GBG64V00	32
322G3710	7322GBG64NC0	68
322G38	7322GBG76N00	32/60
322G3806	7322GBG76V00	32
322G3810	7322GBG76NC0	68
322G39	7322GBG88N00	32/60
322G3906	7322GBG88V00	32
322G3910	7322GBG88NC0	68
322G40	7322GBG99N00	32/60
322G4006	7322GBG99V00	32
322G4010	7322GBG99NC0	68
322G7506	7322GBG4UV00	110
322G8312	73228BG3TTS0	82
322G8512	73228BG4UTS0	82
322G8612	73228BG52TS0	82
322G8712	73228BG64TS0	82
322G8812	73228BG75TS0	82
322G8912	73228BG87TS0	82
322H71	7322HBG2SN00	30/92
322H7106	7322HBG2SV00	30/90/108
322H73	7322HBG3TN00	32/92
322H7306	7322HBG3TV00	32/92/108
322H75	7322HBG4UN00	32/92
322H7506	7322HBG4UV00	32/92/110
322K4106	7322KBG2SVW0	32
322K4306	7322KBG3TVW0	32
322K4506	7322KBG4TVW0	32
322K4606	7322KBG51VW0	32
322K4706	7322KBG62VW0	32
325K4106	7325KBG2SVW0	34
325K4306	7325KBG3TVW0	34
325K4506	7325KBG4TVW0	34
325K4606	7325KBG51VW0	34
325K4706	7325KBG62VW0	34
E 331B01	7331BAG2QN00	152
331B02	7331BAG2KN00	150/178
E 331B21	7331BAG4QN00	152
E 331B74	7331BAG2KNMO	150
331B7480	7331BAG2KNL2	150
331B7490	-	150

Valve reference number - global reference number

Valve reference	Global valve ref.	Page
E 331L21	7331LAV4TNM0	158
E 331L21001D	7331LAV4TN1D	156
E 332B01	7332BAG2QN00	154
332B02	7332BAG2KN00	152/178
E 332B21	7332BAG4QN00	154
E 341B01	7341BAG2PN00	198
341B02	7341BAG2KN00	198
E 341B11	7341BAG3PN00	200
E 341B21	7341BAG4TN00	212
341B34	7341BAG2JNMR	188
341B3403	7341BAG2JNM0	188
341B3480	7341BAG2JNL8	188
341B3490	-	188
341F34	7341FAS3JNMR	190
341F3403	7341FAS3JNM0	190
E 341L01	7341LDC1LNM8	218
341L0180	7341LDC1LNL8	218
E 341L02	7341LDC1LNMI	218
341L04	-	218
341L05	-	218
341L11	-	202/256
E 341L1130	7341LMG2NNM0	204/260
341L1190	-	204/260
E 341L21	7341LAV4TNM0	218
341L2190	7341LAV4TN90	216
341L9101	-	196/254
341L9201	-	214
341L9504	-	270
341L9534	7341LAKBGNM0	270
341L95341D	7341LAKBGN1D	270
341L9584	7341LAKBGNL2	270
341L9588	7341LAPBGPL2	270
341L9594	7341LAKBGN90	270
341L9598	-	270
341N01	2341NAKBJNM1	258
U 341N0150	2341NRKDJNM1	308
341N02	2341NAKBPNM1	264
U 341N0250	2341NRKNNNM1	310
341N11	2341NAKBJNM0	258
341N12	2341NAKBNNM0	264
341N21	7341NAKBJNM1	258
341N22	7341NAKBPNM1	264
341N31	7341NAKBJNM0	260
341N31001D	7341NAKBJN1D	260
341N3108	7341NAKBJPM0	260
341N31081D	7341NAKBJP1D	260
U 341N3150	7341NRKDJN00	308
U 341N31501D	7341NRKDJN1D	308
341N3180	7341NAKBJNL2	260
341N3190	7341NAKBHN90	260
U 341N3192	7341NRKDJN92	310
U 341N3195	7341NRKDJN95	310
341N32	7341NAKBPNM0	266
341N32001D	7341NAKBPN1D	266
U 341N3250	7341NRKNNN00	312
341N3280	7341NAKBPNL2	266
341N3290	7341NAKBPN90	266
U 341N3292	7341NRKNNN92	312

Valve reference	Global valve ref.	Page
U 341N3295	7341NRKNNN95	312
341P01	2341PAG1JNM0	238
U 341P0150	2341PRN2JNM1	296
341P02	2341PAG2HNM0	242
U 341P0250	2341PRN3NNM1	298
341P21	7341PAG1JNM0	238
341P21001D	7341PAG1JN1D	240
341P2108	7341PAG1JPM0	238
341P2180	7341PAG1JNL2	238
341P2190	7341PAG1JN90	238
341P22	7341PAG2PNM0	244
341P22001D	7341PAG2PN1D	246
341P2280	7341PAG2PNL2	244
341P2290	7341PAG2PN90	244
U 341P3150	7341PRN2JN00	296
U 341P3192	7341PRN2JN92	296
U 341P3195	7341PRN2JN95	298
U 341P31951D	7341PRN2JN9D	298
U 341P3250	7341PRN3NN00	300
U 341P3292	7341PRN3NN92	300
U 341P3295	7341PRN3NN95	300
U 341P32951D	7341PRN3NN9D	302
345B04	7345BAG2PN00	200
345B24	7345BAG4TN00	212
345B34	7345BAG2JNMR	192
345F34	7345FAS3JNMR	194
345L01	7345LDC1LNM8	220
345L21	7345LAV4TNM0	218
345P21	7345PAG1JNM0	242
347L11	-	206/258
E 347L1130	7347LMG2NNM0	208
347L9101	-	198/260
347L9201	-	214
347N11	2347NAKBHNM0	262
347N12	2347NAKBPNM0	268
347N31	7347NAKBHNM0	262
U 347N3150	7347NRKDHNM0	314
U 347N3192	7347NRKDHN92	314
347N32	7347NAKBPNM0	268
U 347N3250	7347NRKNNN00	314
347P01	2347PAG1HNM0	240
347P02	2347PAG2PNM0	246
347P21	7347PAG1HNM0	240
347P2190	7347PAG1HN90	240
347P22	7347PAG2PNM0	244
U 347P3150	7347PRN2JN00	304
U 347P3195	7347PRN2JN95	304
U 347P3250	7347PRN3NN00	304
U 347P3295	7347PRN3NN95	306
441N3108	7441NAKBJPM0	266
441P2108	7441PAG1JPM0	242
U 441P3250	7441PRN3NN00	302
541L01	7541LDC1LNR0	220
541N01	7541NAKBJN00	262
541N0108	7541NAKBJN00	268
541P0108	7541PAG1JP00	244
U 541P0250	7541PRN3NNM1	302
547L11	7547LMG2NN00	210

Valve reference	Global valve ref.	Page
-	3121BBN1AV00	38
-	3121BBN1EV00	38
-	3121BBN1GV00	38
-	3121BBN1JV00	38
-	3121BBN1LV00	38
-	3121BBN1NV00	38
-	3121BBN1QV00	38
-	3121BJA7EVC#	42
-	3121BJA7GVC#	42
-	3121BSN1AV00	40
-	3121BSN1EV00	40
-	3121BSN1GV00	40
-	3121BSN1JV00	40
-	3121BSN1LV00	40
-	3121BSN1NV00	40
-	3121BSN1QV00	40
-	3129BBN1AV00	40
-	3129BBN1EV00	40
-	3129BBN1GV00	40
-	3129BBN1JV00	40
-	3129BBN1LV00	40
-	3129BJA7EVC#	42
-	3129BJA7GVC#	42
-	3129BJA7LVC#	42
-	3129BSN1AV00	42
-	3129BSN1EV00	42
-	3129BSN1GV00	42
-	3129BSN1JV00	42
-	3129BSN1LV00	42
-	3131BBN1AV00	162
-	3131BBN1EV00	162
-	3131BBN1GV00	162
-	3131BBN1JV00	162
-	3131BBN1LV00	162
-	3131BBN1NV00	162
-	3131BBN1QV00	162
-	3131BJA7EVC#	170
-	3131BJA7GVC#	170
-	3131BSN1AV00	166
-	3131BSN1EV00	166
-	3131BSN1GV00	166
-	3131BSN1JV00	166
-	3131BSN1LV00	166
-	3131BSN1NV00	166
-	3131BSN1QV00	166
-	3133BBN1AV00	164
-	3133BBN1EV00	164
-	3133BBN1GV00	164
-	3133BBN1JV00	164
-	3133BBN1LV00	164
-	3133BBN1NV00	164
-	3133BBN1QV00	164
-	3133BJA7EVC#	170
-	3133BJA7GVC#	170
-	3133BSN1AV00	168
-	3133BSN1EV00	168
-	3133BSN1GV00	168
-	3133BSN1JV00	168

Valve reference number - global reference number

Valve reference	Global valve ref.	Page
-	3133BSN1LV00	168
-	3133BSN1NV00	168
-	3133BSN1QV00	168
-	3138BBN1AV00	166
-	3138BBN1EV00	166
-	3138BBN1GV00	166
-	3138BBN1JV00	166
-	3138BBN1LV00	166
-	3138BBN1NV00	166
-	3138BBN1QV00	166
-	3138BJA7EVC#	172
-	3138BJA7GVC#	172
-	3138BSN1AV00	170
-	3138BSN1EV00	170
-	3138BSN1GV00	170
-	3138BSN1JV00	170
-	3138BSN1LV00	170
-	3138BSN1NV00	170
-	3138BSN1QV00	170
-	3139BBN1AV00	162
-	3139BBN1EV00	164
-	3139BBN1GV00	164
-	3139BBN1JV00	164
-	3139BBN1LV00	164
-	3139BBN1NV00	164
-	3139BBN1QV00	164
-	3139BJA7EVC#	170
-	3139BJA7GVC#	170
-	3139BSN1AV00	168
-	3139BSN1EV00	168
-	3139BSN1GV00	168
-	3139BSN1JV00	168
-	3139BSN1LV00	168
-	3139BSN1NV00	168
-	3139BSN1QV00	168
-	3921BBN1AV00	38
-	3921BBN1EV00	38
-	3921BBN1GV00	38
-	3921BBN1JV00	38
-	3921BBN1LV00	38
-	3921BBN1NV00	38
-	3921BJA7EVC#	42
-	3921BJA7GVC#	42
-	3921BSN1AV00	40
-	3921BSN1EV00	40
-	3921BSN1GV00	40
-	3921BSN1JV00	40
-	3921BSN1LV00	40
-	3921BSN1NV00	40
-	3931BBN1JV00	162
-	3931BBN1LV00	162
-	3931BBN1NV00	162
-	3931BBN1QV00	162
-	3931BSN1JV00	166
-	3931BSN1LV00	166
-	3931BSN1NV00	166
-	3931BSN1QV00	166
-	3933BBN1AV00	164

Valve reference	Global valve ref.	Page
-	3933BBN1EV00	164
-	3933BBN1GV00	164
-	3933BBN1JV00	164
-	3933BJA7EVC#	170
-	3933BJA7GVC#	172
-	3933BSN1AV00	168
-	3933BSN1EV00	168
-	3933BSN1GV00	168
-	3933BSN1JV00	168
-	71214TN2KT00	114
-	71214TN2MT00	114
-	71214TN2QT00	114
-	71214TN2ST00	114
-	71214VN2KN00	114
-	71214VN2KT00	114
-	71214VN2MN00	114
-	71214VN2MT00	114
-	71214VN2QN00	114
-	71214VN2QT00	114
-	71214VN2SN00	114
-	71214VN2ST00	114
-	7121ZBG1GV00	8/46
-	7121ZBG1LR00	102
-	7121ZBG1LRT0	102
-	7121ZBG1LV00	8/46
-	7121ZCBG1LR00	102
-	7131ZBG1JV00	124
-	7321BBG3TE00	80
-	7321BBG3TN00	56
-	7321BBG3TNM0	56
-	7321BBG4TE00	80
-	7321BBG4TN00	56
-	7321BBG4TNM0	56
-	7321BBG53E00	80
-	7321BBG53N00	56
-	7321BBG53NM0	56
-	7321BBG64E00	80
-	7321BBG64N00	56
-	7321BBG64NM0	58
-	7321BBG78E00	82
-	7321BBG78N00	58
-	7321BBG78NM0	58
-	7321BBG88E00	82
-	7321BBG88N00	58
-	7321BBG88NM0	58
-	7321BBG99E00	82
-	7321BBG99N00	58
-	7321BBG99NM0	58
-	7321BBGCBNM1	58
-	7321BBGDCNM1	58
-	7322BBG3TN00	58
-	7322BBG4TN00	58
-	7322BBG53N00	58
-	7322BBG64N00	60
-	7322BBG78N00	60
-	7322BBG88N00	60
-	7322BBG99N00	60

Index by reference numbers

global reference number - Valve reference number

Global valve ref.	Valve reference	Page
2341NAKBJNM0	341N11	258
2341NAKBJNM1	341N01	258
2341NAKBNNM0	341N12	264
2341NAKBPNM1	341N02	264
2341NRKDJNM1	U 341N0150	308
2341NRKNNNM1	U 341N0250	310
2341PAG1JNM0	341P01	238
2341PAG2HNM0	341P02	242
2341PRN2JNM1	U 341P0150	296
2341PRN3NNM1	U 341P0250	298
2347NAKBHNM0	347N11	262
2347NAKBPNM0	347N12	268
2347PAG1HNM0	347P01	240
2347PAG2PNM0	347P02	246
3121BBN1AV00	-	38
3121BBN1EV00	-	38
3121BBN1GV00	-	38
3121BBN1JV00	-	38
3121BBN1LV00	-	38
3121BBN1NV00	-	38
3121BBN1QV00	-	38
3121BJA7EVC#	-	42
3121BJA7GVC#	-	42
3121BSN1AV00	-	40
3121BSN1EV00	-	40
3121BSN1GV00	-	40
3121BSN1JV00	-	40
3121BSN1LV00	-	40
3121BSN1NV00	-	40
3121BSN1QV00	-	40
3129BBN1AV00	-	40
3129BBN1EV00	-	40
3129BBN1GV00	-	40
3129BBN1JV00	-	40
3129BBN1LV00	-	40
3129BJA7EVC#	-	42
3129BJA7GVC#	-	42
3129BJA7LVC#	-	42
3129BSN1AV00	-	42
3129BSN1EV00	-	42
3129BSN1GV00	-	42
3129BSN1JV00	-	42
3129BSN1LV00	-	42
3131BBN1AV00	-	162
3131BBN1EV00	-	162
3131BBN1GV00	-	162
3131BBN1JV00	-	162
3131BBN1LV00	-	162
3131BBN1NV00	-	162
3131BBN1QV00	-	162
3131BJA7EVC#	-	170
3131BJA7GVC#	-	170
3131BSN1AV00	-	166
3131BSN1EV00	-	166
3131BSN1GV00	-	166
3131BSN1JV00	-	166
3131BSN1LV00	-	166
3131BSN1NV00	-	166
3131BSN1QV00	-	166
3133BBN1AV00	-	164
3133BBN1EV00	-	164
3133BBN1GV00	-	164
3133BBN1JV00	-	164
3133BBN1LV00	-	164
3133BBN1NV00	-	164
3133BBN1QV00	-	164
3133BJA7EVC#	-	170
3133BJA7GVC#	-	170
3133BSN1AV00	-	168
3133BSN1EV00	-	168
3133BSN1GV00	-	168
3133BSN1JV00	-	168
3133BSN1LV00	-	168
3133BSN1NV00	-	168
3133BSN1QV00	-	168
3138BBN1AV00	-	166
3138BBN1EV00	-	166
3138BBN1GV00	-	166
3138BBN1JV00	-	166
3138BBN1LV00	-	166
3138BBN1NV00	-	166
3138BBN1QV00	-	166
3138BJA7EVC#	-	172
3138BJA7GVC#	-	172
3138BSN1AV00	-	170
3138BSN1EV00	-	170
3138BSN1GV00	-	170
3138BSN1JV00	-	170
3138BSN1LV00	-	170
3138BSN1NV00	-	170
3138BSN1QV00	-	170
3139BBN1AV00	-	162
3139BBN1EV00	-	164
3139BBN1GV00	-	164
3139BBN1JV00	-	164
3139BBN1LV00	-	164
3139BBN1NV00	-	164
3139BBN1QV00	-	164
3139BJA7EVC#	-	170
3139BJA7GVC#	-	170
3139BSN1AV00	-	168
3139BSN1EV00	-	168
3139BSN1GV00	-	168
3139BSN1JV00	-	168
3139BSN1LV00	-	168
3139BSN1NV00	-	168
3139BSN1QV00	-	168
3921BBN1AV00	-	38
3921BBN1EV00	-	38
3921BBN1GV00	-	38
3921BBN1JV00	-	38
3921BBN1LV00	-	38
3921BBN1NV00	-	38
3921BJA7EVC#	-	42
3921BJA7GVC#	-	42
3921BSN1AV00	-	40
3921BSN1EV00	-	40
3921BSN1GV00	-	40
3921BSN1JV00	-	40
3921BSN1LV00	-	40
3921BSN1NV00	-	40
3931BBN1JV00	-	162
3931BBN1LV00	-	162
3931BBN1NV00	-	162
3931BBN1QV00	-	162
3931BSN1JV00	-	166
3931BSN1LV00	-	166
3931BSN1NV00	-	166
3931BSN1QV00	-	166
3933BBN1AV00	-	164
3933BBN1EV00	-	164
3933BBN1GV00	-	164
3933BBN1JV00	-	164
3933BJA7EVC#	-	170
3933BJA7GVC#	-	172
3933BSN1AV00	-	168
3933BSN1EV00	-	168
3933BSN1GV00	-	168
3933BSN1JV00	-	168
7033XRN2SN00	U 033X5156	274/294
7033XRN2SN1D	U 033X51561D	274/292
7033XRN3SN00	U 033X5256	276/294
7033XRN3SN1D	U 033X52561D	274/294
71214TN2KT00	-	114
71214TN2MT00	-	114
71214TN2QT00	-	114
71214TN2ST00	-	114
71214VN2KN00	-	114
71214VN2KT00	-	114
71214VN2MN00	-	114
71214VN2MT00	-	114
71214VN2QN00	-	114
71214VN2QT00	-	114
71214VN2SN00	-	114
71214VN2ST00	-	114
7121FBF4GF00	E 121F44	14/88
7121FBF4GR00	121F67	14/88
7121FBF4GV00	E 121F4406	14/50
7121FBF4LF00	121F47	14
7121FBF4LR00	121F63	14/88
7121FBF4LV00	121F4706	14/50
7121FBF4NF00	E 121F43	14/88
7121FBF4NR00	121F64	14/88
7121FBF4NV00	E 121F4302	14/50
7121GBG34VT0	121G2320	104

global reference number - Valve reference number

Global valve ref.	Valve reference	Page
7121GBG45VT0	121G2520	104
7121GBG45VT1	121G2523	104
7121KBG1GF00	E 121K14	8/86
7121KBG1LR00	E 121K23	8/86/102
7121KBG1NRT0	121K2423	104
7121KBG1NV00	121K1302	8
7121KBG1NVM0	121K1352	8/46
7121KBG2ER00	E 121K65	8/86/104
7121KBG2GF00	E 121K04	10/86
7121KBG2GR00	E 121K67	10/86/104
7121KBG2GV00	E 121K0402	8/46
7121KBG2LF00	E 121K07	10
7121KBG2LR00	E 121K63	10/86/104
7121KBG2LV00	121K0706	10/46
7121KBG2LVM0	121K0756	10/46
7121KBG2NE00	121K0323	72
7121KBG2NF00	E 121K03	10/86
7121KBG2NR00	E 121K64	10/86/104
7121KBG2NRT0	121K6423	104
7121KBG2NV00	E 121K0302	10/46
7121KBG2NVM0	E 121K0352	10/46
7121KBG2QRT0	121K6220	106
7121KBG2QV00	121K02	10/48
7121KBG2QVM0	121K0250	10/48
7121KBG2SE00	121K0103	72
7121KBG2SV00	121K01	12/48
7121KBG2SVMO	121K0150	10/48
7121KBG3QV00	121K3206	12/48/104
7121KBG3SV00	121K3106	12/48/104
7121KBG3UE00	121K3303	72
7121KBG3UV00	121K3306	12/48/104
7121KBG42E00	E 121K4603	72
7121KBG42V00	E 121K46	12/48
7121KBG44E00	E 121K4503	72
7121KBG44V00	E 121K45	12/48
7121VVG2GR00	121V5463	74/116
7121VVG2GV00	121V5406	116
7121VVG2LR00	121V5763	74/116
7121VVG2LV00	121V5706	116
7121VVG2NR00	121V5363	74/116
7121VVG2NV00	121V5306	116
7121VVG2NV1D	121V53061D	116
7121VVG2QR00	121V5263	74/116
7121VVG2QT00	121V5212	116
7121VVG2QV00	121V5206	116
7121VVG2SR00	121V5163	74/118
7121VVG2ST00	121V5112	118
7121VVG2SV00	121V5106	118
7121VVG2SV1D	121V51061D	118
7121ZBG1GV00	-	8/46
7121ZBG1LR00	-	102
7121ZBG1LRT0	-	102
7121ZBG1LV00	-	8/46
7121ZCBG1LR00	-	102
7122KBG1LR00	122K9363	12/88/106
7122KBG1LRT0	122K9321	106
7122KBG2GF00	122K84	12/88
7122KBG2GR00	122K8408	12/88

Global valve ref.	Valve reference	Page
7122KBG2GV00	122K8406	12/48
7122KBG2LF00	122K83	12
7122KBG2LR00	122K8363	12/88/106
7122KBG2LRT0	122K8321	106
7122KBG2LV00	122K8306	12/48
7125KBG2NF00	125K03	12
7125KBG2SV00	125K01	14/50
7131EBG2LN00	E 131E03	130/228
7131FBF4GLV5	131F4480	140
7131FBF4GV00	E 131F44	144
7131FBF4GVM0	E 131F4450	144
7131FBF4JV00	131F46	144
7131FBF4JVM0	131F4650	144
7131FBF4LV00	E 131F43	144
7131FBF4LVM0	E 131F4350	144
7131FDF2JV00	E 131F26	148
7131FRF2LV1D	U 131F56951D	278
7131FRF2LV95	U 131F5695	276/292
7131KBG1GV00	E 131K14	124
7131KBG1JV00	131K16	124
7131KBG1JVM0	131K1650	124
7131KBG1LV00	E 131K13	124
7131KBG2BF00	131K05	176
7131KBG2BR00	131K65	176
7131KBG2CV90	131K0490	126/226
7131KBG2ER00	E 131K64	126
7131KBG2ERM0	E 131K6450	126
7131KBG2GV00	E 131K04	126/226
7131KBG2GVL5	131K0480	126/226
7131KBG2GVM0	E 131K0450	126/226
7131KBG2JP1D	E 131K06081D	128/228
7131KBG2JV00	E 131K06	126/226
7131KBG2JVM0	E 131K0650	126/226
7131KBG2LP00	E 131K0308	130/228
7131KBG2LP1D	E 131K03081D	130/228
7131KBG2LPM0	E 131K0358	130/228
7131KBG2LR00	E 131K63	130
7131KBG2LRM0	E 131K6350	130
7131KBG2LV00	E 131K03	128
7131KBG2LV1D	E 131K03001D	228
7131KBG2LVM0	E 131K0350	128/228
7131TBG2JV00	131T23	126
7131TBG2JVM0	131T2301	126
7131TBG2LV00	131T29	128
7131TBG2LVM0	131T2901	128
7131TBG2NVA0	131T22	132
7131TBG2RV00	131T21	132
7131TBG2RVM0	131T2101	132
7131VVG2GR00	131V5463	182
7131VVG2GV00	131V5406	182
7131VVG2LR00	131V5363	182
7131VVG2LV00	131V5306	182
7131WVG2BR00	131V65	176
7131XAKLVN00	131X1101	230
7131XRKMVN00	U 131X1201	276/292
7131ZBG1JV00	-	124
7132FBF4GV00	132F44	144
7132FBF4JV00	132F46	144

Global valve ref.	Valve reference	Page
7132FBF4LV00	132F43	144
7132KBG2GV00	132K04	132
7132KBG2JV00	132K06	132
7132KBG2LV00	132K03	132
7132TBG2JV00	132T23	132
7132TBG2JVM0	132T2301	132
7132TBG2LV00	132T29	132
7132TBG2NVA0	132T22	134
7133FBF4GV00	E 133F44	144
7133FBF4GVM0	E 133F4450	144
7133FBF4JV00	133F46	144
7133FBF4JVM0	133F4650	144
7133FBF4LV00	E 133F43	146
7133FBF4LVM0	E 133F4350	144
7133KBG1GV00	E 133K14	134
7133KBG1JV00	E 133K16	134
7133KBG1LV00	E 133K13	134
7133KBG2BV00	E 133K05	176
7133KBG2GV00	E 133K04	134
7133KBG2GV1D	E 133K04001D	134
7133KBG2GVM0	E 133K0450	134
7133KBG2JV00	E 133K06	134
7133KBG2JVM0	E 133K0650	134
7133KBG2LV00	E 133K03	134
7133KBG2LVM0	E 133K0350	134
7133TBG2JV00	133T23	134
7133TBG2JVM0	133T2301	134
7133TBG2NV00	133T21	134
7133TBG2NVM0	133T2101	134
7133VRN2LV95	U 133V5695	278/288
7133VRN2LV9D	U 133V56951D	278/288
7133VVG2GR00	133V5463	182
7133VVG2GV00	133V5406	182
7133VVG2LR00	133V5363	182
7133VVG2LV00	133V5306	182
7133XRN2SV00	U 133X5156	280/290
7133XRN2SV1D	U 133X51561D	280/288
7133XRN2VN96	U 133X5196	280
7133XRN2VN9H	U 133X51961D	280
7133XRN3SN96	U 133X5296	282/290
7133XRN3SN9H	U 133X52961D	282/290
7135KBG2GV00	135K04	136/228
7135KBG2LV00	135K03	136/228
72218RG3TE00	221G5303	78
72218RG3TV00	221G5306	20/54
72218RG4UE00	221G5503	78
72218RG4UV00	221G5506	20/54
72218RG5VE00	221G5603	78
72218RG5VV00	221G5606	20/54
7221GBG3VE00	221G1303	76
7221GBG3VN00	221G13	16/52/64
7221GBG3VNH0	221G1330	16/52/64
7221GBG3VV00	221G23	16
7221GBG3VVH0	221G2330	16
7221GBG4VE00	221G1503	76
7221GBG4VN00	221G15	16/52/64
7221GBG4VNH0	221G1530	16/52/64
7221GBG4VV00	221G25	16

global reference number - Valve reference number

Global valve ref.	Valve reference	Page
7221GBG4VV1D	221G25001D	16
7221GBG4VVH0	221G2530	16
7221GBG51E00	221G1603	76
7221GBG51N00	221G16	18/52
7221GBG51NC0	221G1610	64
7221GBG51NCH	221G1631	64
7221GBG51NH0	221G1630	18/52
7221GBG51V00	221G26	18
7221GBG51V1D	221G26001D	16
7221GBG51VH0	221G2630	18
7221GBG61E00	221G1703	76
7221GBG61N00	221G17	18/52
7221GBG61NC0	221G1710	64
7221GBG61NCH	221G1731	64
7221GBG61NH0	221G1730	18/52
7221GBG61V00	221G27	18
7221GBG61V1D	221G27001D	18
7221GBG61VH0	221G2730	18
7221GBG64E00	221G2103	76
7221GBG64N00	221G21	18/54
7221GBG64NC0	221G2110	64
7221GBG64NCH	221G2131	64
7221GBG64NH0	221G2130	18/52
7221GBG64V00	221G2106	18
7221GBG64VHO	221G2136	18
72228BG3TES0	222G3303	78
72228BG3TV00	222G3306	20/54
72228BG4UES0	222G3503	78
72228BG4UV00	222G3506	20/54
72228BG5VES0	222G3603	78
72228BG5VV00	222G3606	20/54
72228RG3TE00	222G5303	78
72228RG3TV00	222G5306	20/54
72228RG4UE00	222G5503	78
72228RG4UV00	222G5506	20/54
72228RG5VE00	222G5603	78
73218BG3TTS0	321G8312	80
73218BG4UTS0	321G8512	80
73218BG5VTS0	321G8612	80
73218BG64TS0	321G8712	82
73218BG75TS0	321G8812	82
73218BG87TS0	321G8912	82
7321BBG3TE00	-	80
7321BBG3TN00	-	56
7321BBG3TNM0	-	56
7321BBG4TE00	-	80
7321BBG4TN00	-	56
7321BBG4TNM0	-	56
7321BBG53E00	-	80
7321BBG53N00	-	56
7321BBG53NM0	-	56
7321BBG64E00	-	80
7321BBG64N00	-	56
7321BBG64NM0	-	58
7321BBG78E00	-	82
7321BBG78N00	-	58
7321BBG78NM0	-	58
7321BBG88E00	-	82

Global valve ref.	Valve reference	Page
7321BBG88N00	-	58
7321BBG88NM0	-	58
7321BBG99E00	-	82
7321BBG99N00	-	58
7321BBG99NM0	-	58
7321BBGCBNM1	-	58
7321BBGDCNM1	-	58
7321FBF3TN00	E 321F32	34/60/92
7321FBF3TV00	E 321F3202	34/92/110
7321GBG53N00	E 321G36	24/56
7321GBG53NMC	E 321G3610	66
7321GBG53V00	E 321G3606	24
7321GBG64N00	E 321G37	26/58
7321GBG64N1D	E 321G37101D	26
7321GBG64NMC	E 321G3710	66
7321GBG64V00	E 321G3706	24
7321GBG76N00	E 321G38	26/58
7321GBG76NMC	E 321G3810	68
7321GBG76V00	E 321G3806	26
7321GBG88N00	E 321G39	28/58
7321GBG88N3D	E 321G39101D	28
7321GBG88NMC	E 321G3910	68
7321GBG88V00	E 321G3906	26
7321GBG99N00	E 321G40	30/58
7321GBG99N3D	E 321G40101D	30
7321GBG99NMC	E 321G4010	68
7321GBG99V00	E 321G4006	28
7321HBG2SN00	E 321H11	22/90
7321HBG2SV00	E 321H21	22/90/108
7321HBG3TN00	E 321H13	22/90
7321HBG3TV00	E 321H23	22/90/108
7321HBG3TVT0	321H2322	108
7321HBG4UN00	E 321H15	24/90
7321HBG4UV00	E 321H25	22/90/108
7321HBG4UVT0	321H2522	108
7321KBG2SEW0	321K4103	80
7321KBG2SVMW	321K4156	66
7321KBG2SVW0	321K4106	66
7321KBG3TEW0	321K4303	80
7321KBG3TVMW	321K4356	66
7321KBG3TVW0	321K4306	66
7321KBG4TEW0	321K4503	80
7321KBG4TVMW	321K4556	66
7321KBG4TVW0	321K4506	66
7321KBG51EW0	321K4603	80
7321KBG51VMW	321K4656	66
7321KBG51VW0	321K4606	66
7321KBG62EW0	321K4703	80
7321KBG62VMW	321K4756	66
7321KBG62VW0	321K4706	66
73228BG3TTS0	322G8312	82
73228BG4UTS0	322G8512	82
73228BG52TS0	322G8612	82
73228BG64TS0	322G8712	82
73228BG75TS0	322G8812	82
73228BG87TS0	322G8912	82
7322BBG3TN00	-	58
7322BBG4TN00	-	58

Global valve ref.	Valve reference	Page
7322BBG53N00	-	58
7322BBG64N00	-	60
7322BBG78N00	-	60
7322BBG88N00	-	60
7322BBG99N00	-	60
7322FBF3TN00	322F72	34/60/92
7322FBF3TV00	322F7206	34/92/110
7322GBG4UV00	322G7506	110
7322GBG53N00	322G36	32/58
7322GBG53NC0	322G3610	68
7322GBG53V00	322G3606	32
7322GBG64N00	322G37	32/60
7322GBG64NC0	322G3710	68
7322GBG64V00	322G3706	32
7322GBG76N00	322G38	32/60
7322GBG76NC0	322G3810	68
7322GBG76V00	322G3806	32
7322GBG88N00	322G39	32/60
7322GBG88NC0	322G3910	68
7322GBG88V00	322G3906	32
7322GBG99N00	322G40	32/60
7322GBG99NC0	322G4010	68
7322GBG99V00	322G4006	32
7322HBG2SN00	322H71	30/92
7322HBG2SV00	322H7106	30/90/108
7322HBG3TN00	322H73	32/92
7322HBG3TV00	322H7306	32/92/108
7322HBG4UN00	322H75	32/92
7322HBG4UV00	322H7506	32/92/110
7322KBG2SVW0	322K4106	32
7322KBG3TVW0	322K4306	32
7322KBG4TVW0	322K4506	32
7322KBG51VW0	322K4606	32
7322KBG62VW0	322K4706	32
7325KBG2SVW0	325K4106	34
7325KBG3TVW0	325K4306	34
7325KBG4TVW0	325K4506	34
7325KBG51VW0	325K4606	34
7325KBG62VW0	325K4706	34
7331BAG2KN00	331B02	150/178
7331BAG2KNL2	331B7480	150
7331BAG2KNMO	E 331B74	150
7331BAG2QN00	E 331B01	152
7331BAG4QN00	E 331B21	152
7331LAV4TN1D	E 331L21001D	156
7331LAV4TNM0	E 331L21	158
7332BAG2KN00	332B02	152/178
7332BAG2QN00	E 332B01	154
7332BAG4QN00	E 332B21	154
7341BAG2JNL8	341B3480	188
7341BAG2JNM0	341B3403	188
7341BAG2JNMR	341B34	188
7341BAG2KN00	341B02	198
7341BAG2PN00	E 341B01	198
7341BAG3PN00	E 341B11	200
7341BAG4TN00	E 341B21	212
7341FAS3JNM0	341F3403	190
7341FAS3JNMR	341F34	190

global reference number - Valve reference number

Global valve ref.	Valve reference	Page
7341LAKBGN1D	341L95341D	270
7341LAKBGN90	341L9594	270
7341LAKBGNL2	341L9584	270
7341LAKBGNM0	341L9534	270
7341LAPBGPL2	341L9588	270
7341LAV4TN90	341L2190	216
7341LAV4TNM0	E 341L21	218
7341LDC1LNL8	341L0180	218
7341LDC1LNM8	E 341L01	218
7341LDC1LNMI	E 341L02	218
7341LMG2NNM0	E 341L1130	204/254
7341NAKBHN90	341N3190	260
7341NAKBJN1D	341N31001D	260
7341NAKBJNL2	341N3180	260
7341NAKBJNM0	341N31	260
7341NAKBJNM1	341N21	258
7341NAKBJP1D	341N31081D	260
7341NAKBJPM0	341N3108	260
7341NAKBPN1D	341N32001D	266
7341NAKBPN90	341N3290	266
7341NAKBPNL2	341N3280	266
7341NAKBPNM0	341N32	266
7341NAKBPNM1	341N22	264
7341NRKDJN00	U 341N3150	308
7341NRKDJN1D	U 341N31501D	308
7341NRKDJN92	U 341N3192	310
7341NRKDJN95	U 341N3195	310
7341NRKNNN00	U 341N3250	312
7341NRKNNN92	U 341N3292	312
7341NRKNNN95	U 341N3295	312
7341PAG1JN1D	341P21001D	240
7341PAG1JN90	341P2190	238
7341PAG1JNL2	341P2180	238
7341PAG1JNM0	341P21	238
7341PAG1JPM0	341P2108	238
7341PAG2PN1D	341P22001D	246
7341PAG2PN90	341P2290	244
7341PAG2PNL2	341P2280	244
7341PAG2PNM0	341P22	244
7341PRN2JN00	U 341P3150	296
7341PRN2JN92	U 341P3192	296
7341PRN2JN95	U 341P3195	298
7341PRN2JN9D	U 341P31951D	298
7341PRN3NN00	U 341P3250	300
7341PRN3NN92	U 341P3292	300
7341PRN3NN95	U 341P3295	300
7341PRN3NN9D	U 341P32951D	302
7345BAG2JNMR	345B34	192
7345BAG2PN00	345B04	200
7345BAG4TN00	345B24	212
7345FAS3JNMR	345F34	194
7345LAV4TNM0	345L21	218
7345LDC1LNM8	345L01	220
7345PAG1JNM0	345P21	242
7347LMG2NNM0	E 347L1130	208
7347NAKBHNM0	347N31	262
7347NAKBPNM0	347N32	268
7347NRKDHN92	U 347N3192	314

Global valve ref.	Valve reference	Page
7347NRKDHNM0	U 347N3150	314
7347NRKNNN00	U 347N3250	314
7347PAG1HN90	347P2190	240
7347PAG1HNM0	347P21	240
7347PAG2PNM0	347P22	244
7347PRN2JN00	U 347P3150	304
7347PRN2JN95	U 347P3195	304
7347PRN3NN00	U 347P3250	304
7347PRN3NN95	U 347P3295	306
7441NAKBJPM0	441N3108	266
7441PAG1JPM0	441P2108	242
7441PRN3NN00	U 441P3250	302
7541LDC1LNR0	541L01	220
7541NAKBJN00	541N01	262
7541PAG1JP00	541P0108	244
7541PRN3NNM1	U 541P0250	302
7547LMG2NN00	547L11	210
-	121K6423	104
-	121M13	8/46
-	121M14	8/46
-	131F4490	136
-	131M14	124/226
-	131M15	124/226
-	131M74	142
-	131M7450	142
-	131M75	138
-	131M7550	138
-	131V5490	182
-	133X01	230
-	221J3301E	118
-	321G3790	26
-	321G3990	26
-	321G4090	28
-	321H1590	22
-	321K31	22/56
-	321K3106	22
-	321K33	22/56
-	321K3306	22
-	321K35	22/56
-	321K3506	22
-	321K36	24/56
-	321K3606	24
-	321K37	24/56
-	321K3706	24
-	331B7490	150
-	341B3490	188
-	341L04	218
-	341L05	218
-	341L11	202/250
-	341L1190	204/254
-	341L9101	196/248
-	341L9201	214
-	341L9504	270
-	341L9598	270
-	347L11	206/252
-	347L9101	198/254
-	347L9201	214

FLUIDTECHNIK BOHEMIA, s. r. o., Olomoucká 87, 627 00 BRNO, tel.: +420 548 213 233-5, +420 548 426 811, fax: +420 548 213 238
POLIČKA – Družstevní 422, 572 01, tel.: 461 722 319, fax: 461 721 044 • NOVÉ MĚSTO NAD METUJÍ – Vrchoviny 29, 549 01,
tel./fax: 491 472 844, tel.: 491 472 328 • OPAVA – Hradecká 668/1, 746 01, tel.: 553 770 911, fax: 553 770 912
LOUNY – Vladimírská 2457, 440 01, tel./fax: 415 658 703 • PLZEŇ – Brojova 16, 326 00, tel.: 378 121 340, fax: 378 121 341
E-mail: brno@fluidbohemia.cz • www.fluidtechnik.eu • www.parker-origa.cz
NON STOP linka technické podpory: 548 426 832

Catalogue no. 8930/GB part III.