BVHD - Wafer
DN 50 - 500 • 2” - 20”

BLHD - Lug
DN 50 - 500 • 2” - 20”

Max working pressure:
BVHD/BLHD DN 50÷500: **25 Bar**
Flange: ***PN 10-16-25 • A150***

Design:
EN 593~EN 736
EN 12516~EN 1092~EN12266
ISO 5211~DIN 3337~API 609~ASME B16.34
PED 97/23/EC (cat III) Mod H

Face to face:
DIN EN 558-1 Series 20~ISO 5752 Series 20
BS-5155 Series 4~MSS-SP67
NFE 29305-1
API 609 cat.B
API 609 cat.A (DN 350 excluded)

Testing:
EN 12266-1 Rate A (supersedes DIN 3230)
ISO 5208 Rate A ~ API 598
FIRE TEST API 607 VI Ed. September
Class V - Met/Met

Tag:
EN 19 ~ MSS SP-25

TYPE APPROVAL
BUREAU VERITAS TYPE APPROVAL
EAC
CE 0497 [PED]
Ex II 2 GD c TX
Fire-Safe ANSI/API 607 - ISO 10497-5
SIL safety integrity level
FUGITIVE EMISSIONS ISO 15848-1
TÜV SÜD TA-Luft VDI 2440 ITALIA

BODY			
material	references	standard coating	DN
Carbon steel (wafer, lug)	ASTM A216-WCB	High-temp coating - grey color	50-500
Stainless steel (wafer, lug)	ASTM A351 CF8M (A316)	-	50-500
Austenitic Stainless steel	ASTM A351 CK3MCuN (6MO)	-	50-500
SUPERDUPLEX	ASTM A890 Gr. 5A	-	50-500

DISC		
material	references	DN
Stainless steel	ASTM A351 CF8M (A316)	50-500
Austenitic Stainless steel	ASTM A351 CK3MCuN (6MO)	50-500
SUPERDUPLEX	ASTM A890 Gr. 5A	50-500

BODY SEAT		
ref.	material	working temp.
RT	RTFE (PTFE reinforced)	-60°C / +230°C
MT	Inconel 625	-60°C / +450°C

On request can be supplied other materials as: LCB, Hastelloy, Monel, Uranus, Alloy, DUPLEX, Special steels, Special bronzes.
Special coating on request.

BVHD - Wafer • RTFE seat
DN 50 - 500 • 2” - 20”
PN 10 - 16 - 25 • ANSI 150

BLHD - Lug • RTFE seat
DN 50 - 500 • 2” - 20”
PN 10 - 16 - 25 • ANSI 150

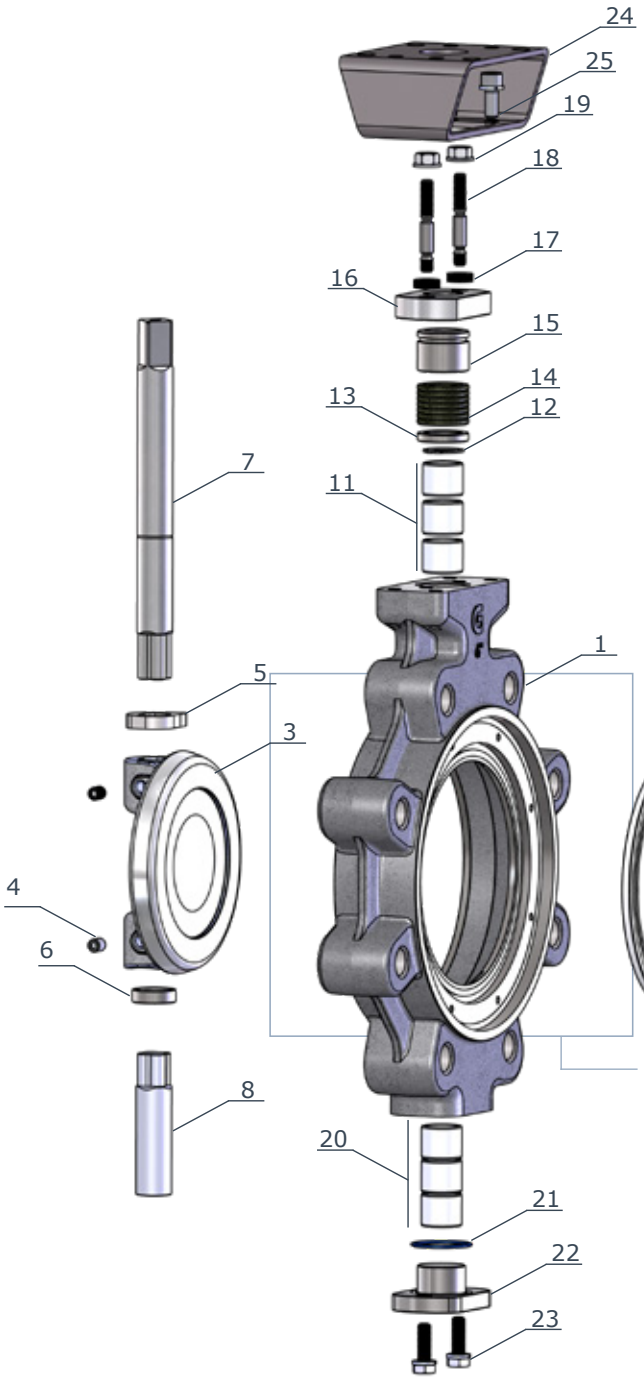

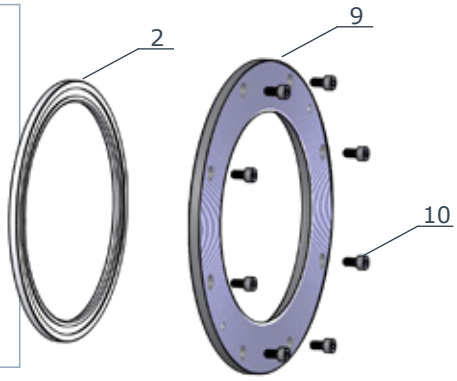

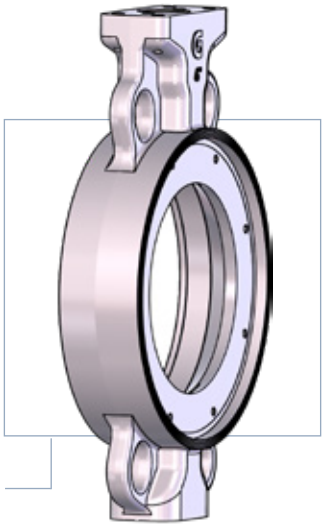

1A Lug body

1B Wafer body

item	q.ty	part	material
1	1	body A: Lug B: Wafer	• A216 - WCB • A351 - CF8M (AISI 316) • A351 - CK3MCuN (6MO) • ASTM A890 Gr.5A (S.DUPLEX)
◇ 2	1	soft seat	• RTFE (PTFE reinforced)
3	1	disc	• A351 - CF8M (AISI 316) • A351 - CK3MCuN (6MO) • ASTM A890 Gr.5A (S.DUPLEX)
4	2	locking pins	• AISI316
5	1	upper spacer	• AISI316
6	1	lower spacer	• AISI316
7	1	upper shaft	• ASTM A564 Gr630
8	1	lower shaft	• ASTM A564 Gr630
9	1	seat retaining flange	• AISI 316
10	8	screw	• AISI 316

item	q.ty	part	material
◇ 11	3	upper bush	• stainless steel + PTFE • steel + PTFE
12	1	retaining ring	• A 316
13	1	thrust block	• A 316
◇ 14	1	shaft packing	• graphite • PTFE (on request)
15	1	gland	• AISI316
16	1	gland flange	• AISI316
17	2	springs set	• stainless steel
18	2	rods	• AISI 316
19	2	nut	• AISI 316
◇ 20	3	lower bush	• stainless steel + PTFE • steel + PTFE
◇ 21	1	O.ring	• PTFE
22	1	lower plug	• AISI 316
23	2	screw	• AISI 316
24	1	upper flange	• steel epoxy coated
25	4	screw	• AISI 316

◊ parts included in spare kit

BVHD - Wafer • Inconel seat
DN 50 - 500 • 2” - 20”
PN 10 - 16 - 25 • ANSI 150

BLHD - Lug • Inconel seat
DN 50 - 500 • 2” - 20”
PN 10 - 16 - 25 • ANSI 150

item	q.ty	part	material
1	1	body A: Lug B: Wafer	• A216 - WCB • A351 - CF8M (AISI 316) • A351 - CK3MCuN (6MO) • ASTM A890 Gr.5A (S.DUPLEX)
◇ 2	1	metallic seat	• Inconel 625 + graphite
3	1	disc	• A351 - CF8M (AISI 316) • A351 - CK3MCuN (6MO) • ASTM A890 Gr.5A (S.DUPLEX)
4	2	locking pins	• AISI316
5	1	upper spacer	• AISI316
6	1	lower spacer	• AISI316
7	1	upper shaft	• ASTM A564 Gr630
8	1	lower shaft	• ASTM A564 Gr630
9	1	seat retaining flange	• AISI 316
10	8	screw	• AISI 316
◇ 11	3	upper bush	• stainless steel + PTFE • steel + PTFE

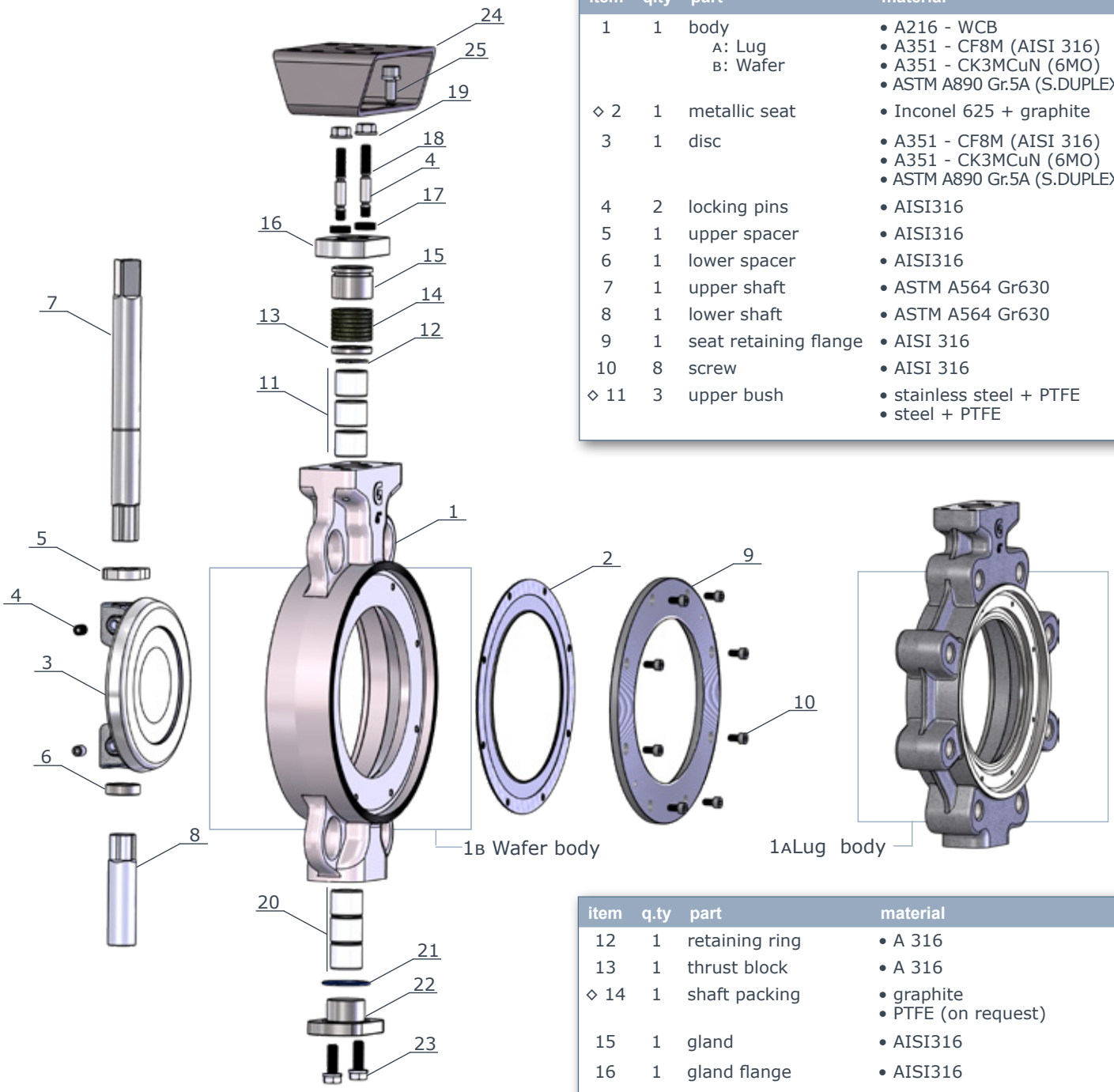

item	q.ty	part	material
12	1	retaining ring	• A 316
13	1	thrust block	• A 316
◇ 14	1	shaft packing	• graphite • PTFE (on request)
15	1	gland	• AISI316
16	1	gland flange	• AISI316
17	2	springs set	• stainless steel
18	2	rods	• AISI 316
19	2	nut	• AISI 316
◇ 20	3	lower bush	• stainless steel + PTFE • steel + PTFE
◇ 21	1	packing	• graphite
22	1	lower plug	• AISI 316
23	2	screw	• AISI 316
24	1	upper flange	• steel epoxy coated
25	4	screw	• AISI 316

◊ parts included in spare kit

BVHD - Wafer • "FIRE SAFE" design
DN 50 - 500 • 2” - 20"
PN 10-16-25 • ANSI 150

BLHD - Lug • "FIRE SAFE" design
DN 50 - 500 • 2” - 20"
PN 10-16-25 • ANSI 150

item	q.ty	part	material
1	1	body A: Lug B: Wafer	• A216 - WCB • A351 - CF8M (AISI 316) • A351 - CK3MCuN (6MO) • ASTM A890 Gr.5A (S.DUPLEX)
◇ 2A	1	soft seat	• RTFE (PTFE reinforced)
◇ 2B	1	metallic seat	• Inconel 625 + graphite
3	1	disc	• A351 - CF8M (AISI 316) • A351 - CK3MCuN (6MO) • ASTM A890 Gr.5A (S.DUPLEX)
4	2	locking pins	• AISI316
5	1	upper spacer	• AISI316
6	1	lower spacer	• AISI316
7	1	upper shaft	• ASTM A564 Gr630
8	1	lower shaft	• ASTM A564 Gr630
9	1	seat retaining flange	• AISI 316
10	8	screw	• AISI 316
◇ 11	3	upper bush	• stainless steel + PTFE • steel + PTFE
12	1	retaining ring	• A 316

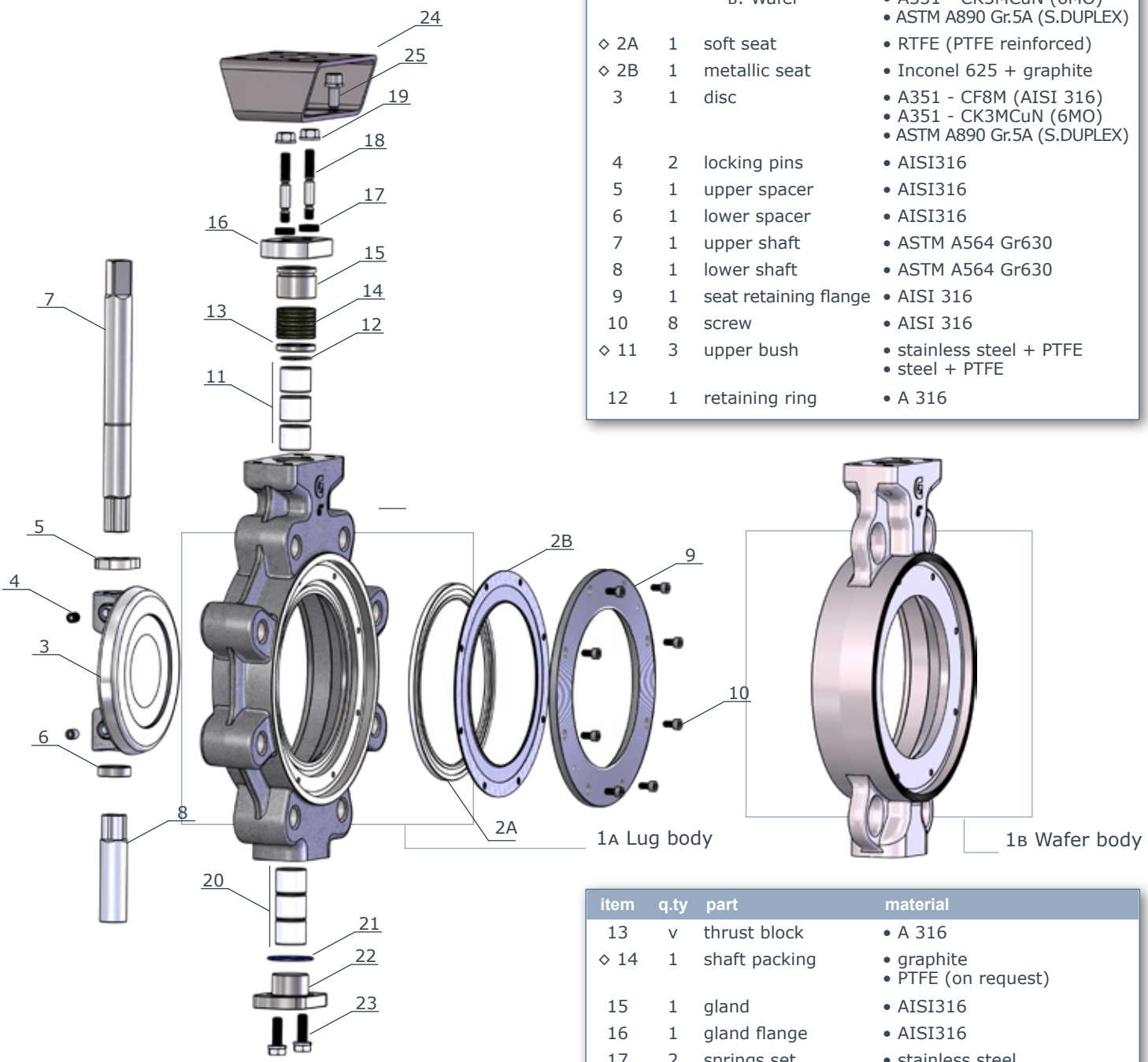

item	q.ty	part	material
13	v	thrust block	• A 316
◇ 14	1	shaft packing	• graphite • PTFE (on request)
15	1	gland	• AISI316
16	1	gland flange	• AISI316
17	2	springs set	• stainless steel
18	2	rods	• AISI 316
19	2	nut	• AISI 316
◇ 20	3	lower bush	• stainless steel + PTFE • steel + PTFE
◇ 21	1	packing	• graphite
22	1	lower plug	• AISI 316
23	2	screw	• AISI 316
24	1	upper flange	• steel epoxy coated
25	4	screw	• AISI 316

◊ parts included in spare kit

BVHD/BLHD dimensions

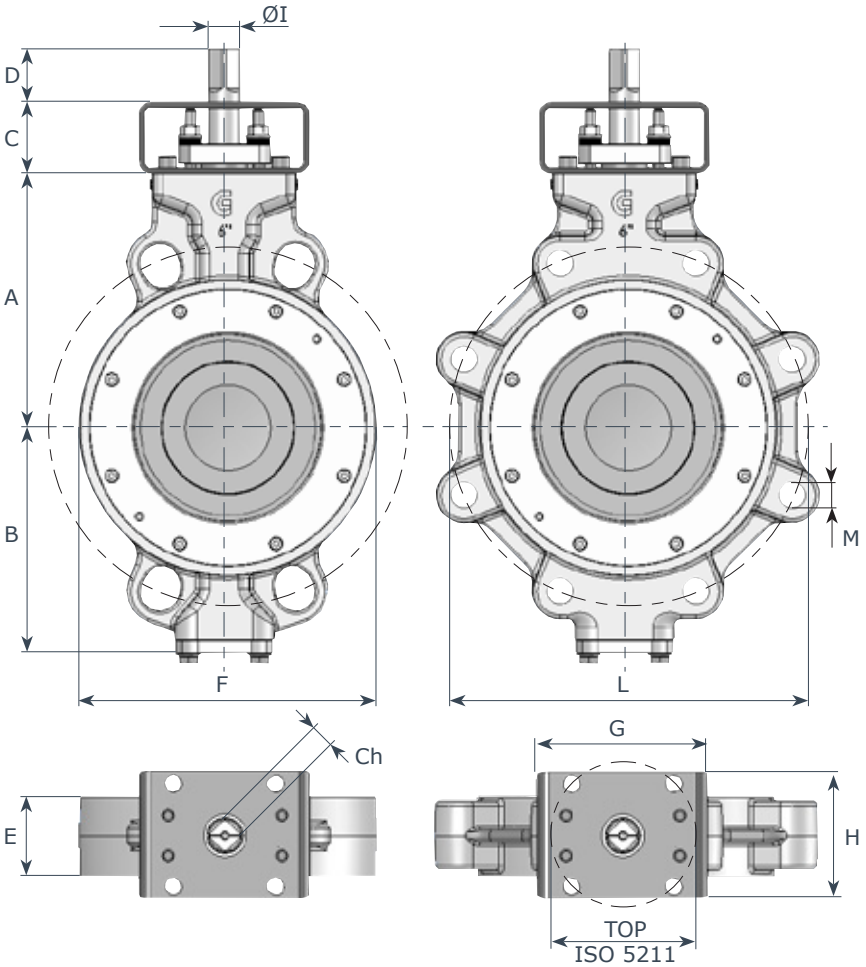

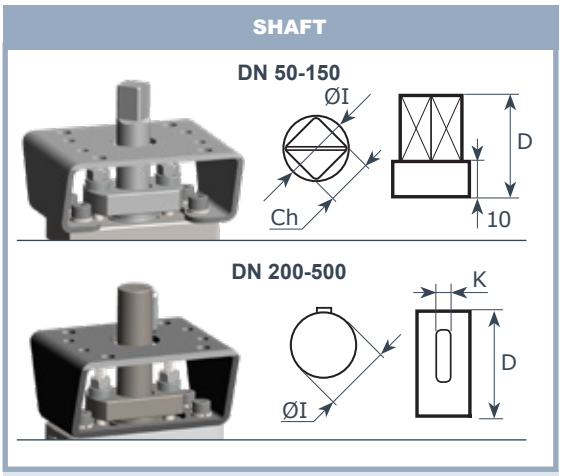

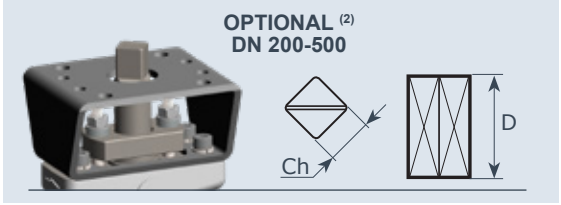

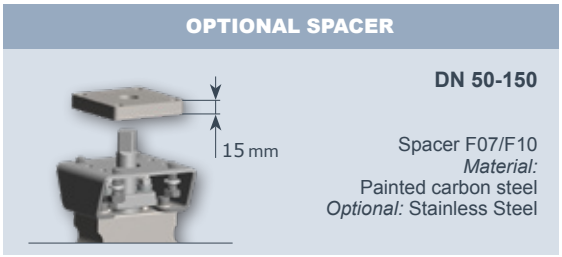

DN	"	A	B	C	D	E	F	G	H	Ø I	Ch	K	TOP	OPTIONAL D (2)	OPTIONAL Ch(2)
50	2	117	81	50	34	43	95	100	70	14	11	-	F05/F07	-	-
65	2 1/2	120	93	50	34	46	105	100	70	14	11	-	F05/F07	-	-
80	3	129	101	50	34	46	127	100	70	14	11	-	F05/F07	-	-
100	4	160	128	50	34	52	150	100	70	18	14	-	F05/F07	-	-
125	5	170	159	50	38	56	174	120	90	22	17	-	F07/F10	-	-
150	6	179	168	50	38	56	210	120	90	22	17	-	F07/F10	-	-
200	8	218	207	60	40	61	270	120	90	25	-	8	F07/F10	23	22
250	10	257	232	80	60	69	325	160	130	30	-	10	F12	23	22
300	12	300	270	80	60	78	378	160	130	35	-	10	F12	28	27
350	14	328	304	100	60	92	432	200	140	40	-	12	F14	28	27
400	16	387	340	100	60	102	485	200	140	45	-	14	F14	37	36
500	20	451	427	100	75	127	580	200	165	60	-	18	F16	47	46

DN	PN 10			PN 16			PN 25			ANSI 150			Kg.	
	M	n.	L	M	n.	L	M	n.	L	M (1)	n.	L	wafer	lug
50	M16	4	125	M16	4	125	M16	4	125	M16	4	120.6	3.5	5.7
65	M16	8	145	M16	8	145	M16	8	145	M16	4	139.7	4.0	7
80	M16	8	160	M16	8	160	M16	8	160	M16	4	152.4	4.8	7.6
100	M16	8	180	M16	8	180	M20	8	190	M16	8	190.5	8	9.7
125	M16	8	210	M16	8	210	M24	8	220	M20	8	215.9	10.1	14.8
150	M20	8	240	M20	8	240	M24	8	250	M20	8	241.3	13.5	17.6
200	M20	8	295	M20	12	295	M24	12	310	M20	8	298.4	22	32
250	M20	12	350	M24	12	355	M27	12	370	M22	12	361.9	35	46
300	M20	12	400	M24	12	410	M27	16	430	M22	12	431.8	50	62
350	M20	12	460	M24	16	470	M30	16	490	M24	12	476,2	83	110
400	M24	16	515	M27	16	525	M33	16	550	M27	16	539,7	107	140
500	M24	20	620	M30	20	650	M33	20	660	M27	20	635	200	250

NOTE (1) : in case of ANSI150 flanges, threading can be ANSI B1.1 UNC2B

Compatible flanges JIS B2220 :2004

DN	BVHD - wafer (Pmax = 25bar)					BLHD - lug (Pmax = 25bar)				
	JIS 5K	JIS 10K	JIS 16K	JIS 20K	JIS 30K	JIS 5K	JIS 10K	JIS 16K	JIS 20K	JIS 30K
50	✕	✓	●	●	●	✕	●	●	●	✕
65	●	✓	●	●	✕	●	●	●	●	✕
80	●	●	●	●	✕	●	●	●	●	●
100	✕	●	✓	✓	✓	✕	●	●	●	●
125	●	●	✓	✓	✓	●	●	●	●	●
150	●	✓	✕	✕	✕	●	✓	✕	✕	✕
200	✕	●	✓	✓	●	✕	●	●	●	●
250	●	✓	✕	✕	✕	●	●	✕	✕	✕
300	✕	✕	✕	✕	✕	✕	✕	✕	✕	✕
350	✕	✕	●	●	●	✕	✕	●	●	●
400	✕	●	●	●	✕	✕	●	●	●	✕
500	please contact Technical Office									

✓ standard ● on request ✕ not possible

Torque values - Nm | safety factor excluded

seat: RTFE - fluid: H_2O - 20°C					seat: INCONEL - fluid: H_2O - 20°C				
working pressure: BAR					working pressure: BAR				
DN	10	16	20	25	DN	10	16	20	25
50	24	30	40	47	50	36	44	58	68
65	34	38	48	60	65	51	56	70	86
80	38	45	54	68	80	57	67	78	97
100	45	56	62	81	100	68	83	89	114
125	85	90	105	120	125	124	133	154	168
150	130	145	170	210	150	186	212	248	302
200	180	240	270	390	200	261	350	392	570
250	330	450	520	580	250	480	668	765	848
300	580	640	740	850	300	848	941	1085	1244
350	780	1030	1190	1550	350	950	1250	1500	1850
400	850	1400	1750	2275	400	1750	2180	2470	2830
500	1925	2560	2980	3875	500	2740	3445	3910	4500

Pressure / Temperature

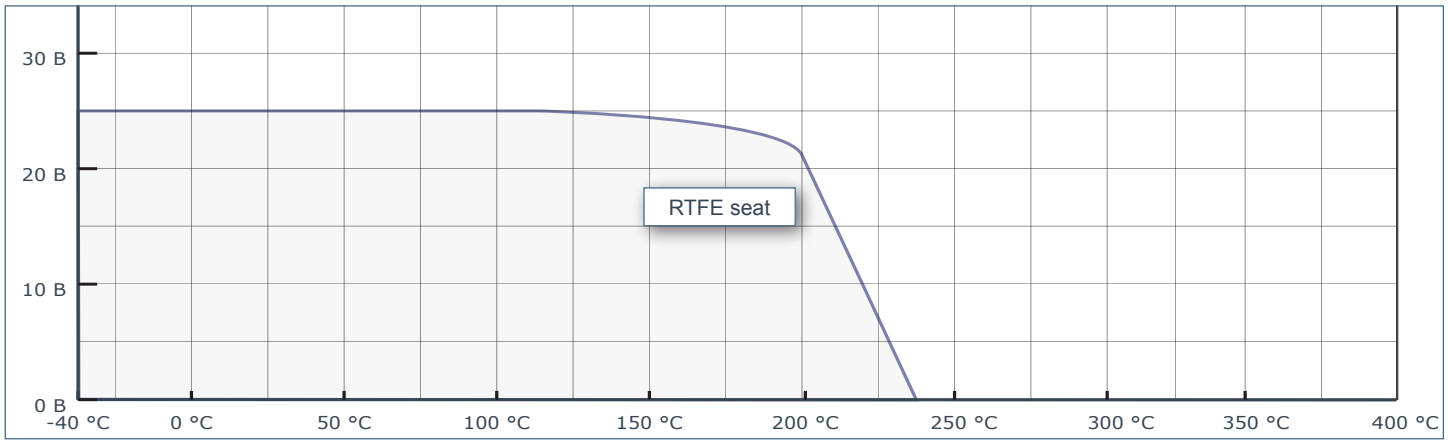

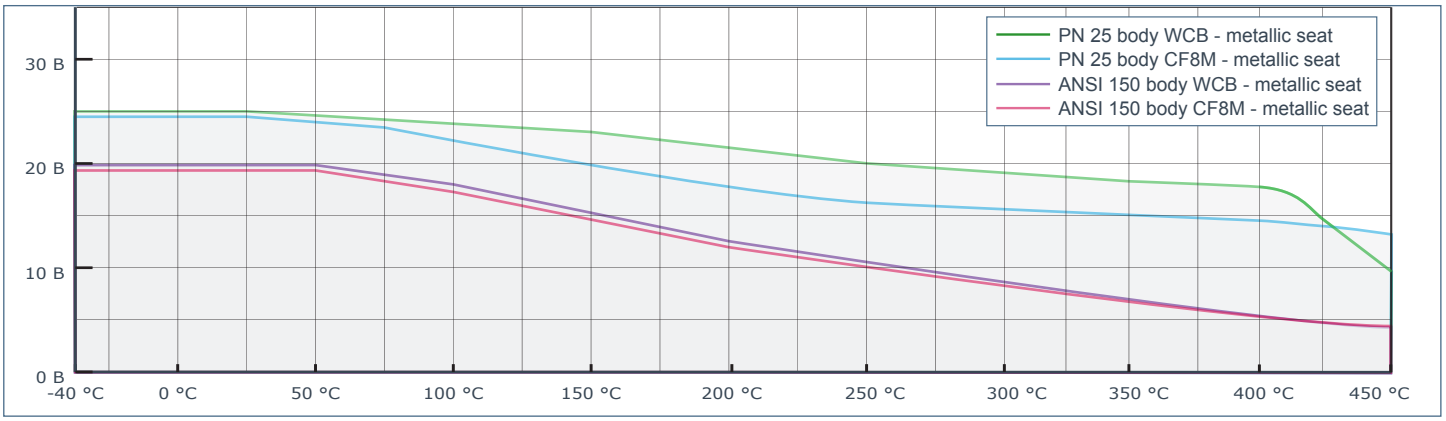

Bolts and rods dimensions

DN	Wafer valves											
	PN10			PN16			PN25			A150		
	Bolts	Rods	N°	Bolts	Rods	N°	Bolts	Rods	N°	Bolts	Rods	N°
50	M16x110	M16x130	4	M16x110	M16x130	4	M16x120	M16x130	4	M16x120	M16x130	4
65	M16x120	M16x130	8	M16x120	M16x130	8	M16x120	M16x140	8	M16x130	M16x140	4
80	M16x120	M16x130	8	M16x120	M16x130	8	M16x130	M16x140	8	M16x130	M16x140	4
100	M16x130	M16x140	8	M16x130	M16x140	8	M20x140	M20x150	8	M16x130	M16x150	8
125	M16x130	M16x150	8	M16x140	M16x150	8	M24x150	M24x170	8	M20x140	M20x160	8
150	M20x140	M20x150	8	M20x140	M20x150	8	M24x150	M24x170	8	M20x140	M20x160	8
200	M20x150	M20x160	8	M20x150	M20x160	12	M24x160	M24x180	12	M20x160	M20x170	8
250	M20x160	M20x180	12	M24x160	M24x180	12	M27x180	M27x200	12	M22x170	M22x200	12
300	M20x170	M20x180	12	M24x180	M24x200	12	M27x200	M27x220	16	M22x180	M22x200	12
350	M20x180	M20x200	12	M24x200	M24x220	16	M30x220	M30x240	16	M24x220	M24x220	12
400	M24x200	M24x220	16	M27x220	M27x240	16	M33x240	M33x260	16	M27x220	M27x240	16
500	M24x220	M24x240	16	M30x240	M30x280	16	M33x260	M33x300	16	M27x260	M27x280	16
	* REAR: Bolts M24x60		4	* REAR: Bolts M30x70		4	* REAR: Bolts M33x80		4	* REAR: Bolts M27x80		4
	* FRONT: Bolts M24x70		4	* FRONT: Bolts M30x80		4	* FRONT: Bolts M33x90		4	* FRONT: Bolts M27x90		4

* Valves DN500 (both LUG and WAFER execution) have 4 threaded blind holes each side, therefore screws marked with * are to be used.

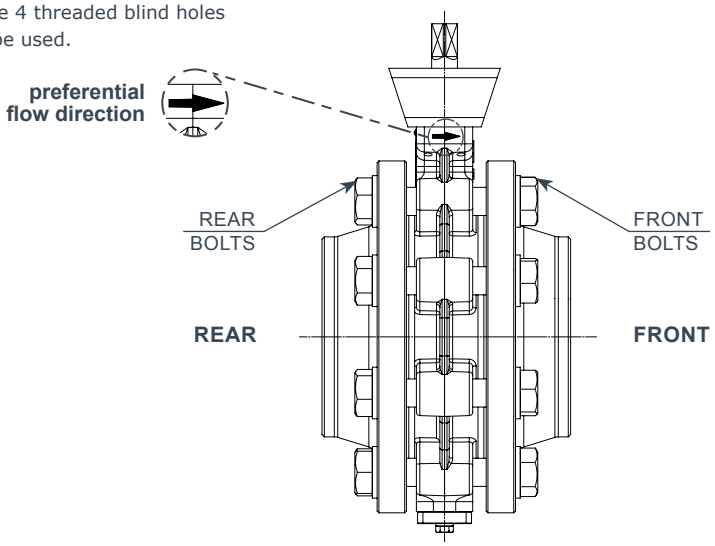

NOTE 1

Screw and rod dimensions have been calculated with:

- spiralwound gasket ASME B16.20a (ex API 601)
- washer EN ISO 7089 (ex UNI 6592) - on both flanges
- welding neck flanges PN 10/16/25 (EN1092-1 Type 11)
- welding neck flanges ANSI150 (ANSI B16.5)

NOTE 2

Number of nuts should be double when WAFER valves are assembled with threaded rods.

DN	Lug valves															
	PN10				PN16				PN25				A150			
	Rear		Front		Rear		Front		Rear		Front		Rear		Front	
	Bolts	N°	Bolts	N°	Bolts	N°	Bolts	N°	Bolts	N°	Bolts	N°	Bolts	N°	Bolts	N°
50	M16x45	4	M16x45	4	M16x45	4	M16x45	4	M16x45	4	M16x45	4	M16x45	4	M16x45	4
65	M16x40	8	M16x50	8	M16x40	8	M16x50	8	M16x45	8	M16x55	8	M16x45	4	M16x55	4
80	M16x45	8	M16x55	8	M16x45	8	M16x55	8	M16x50	8	M16x55	8	M16x45	4	M16x55	4
100	M16x50	8	M16x50	8	M16x50	8	M16x50	8	M20x55	8	M20x55	8	M16x55	8	M16x55	8
125	M16x55	8	M16x55	8	M16x55	8	M16x55	8	M24x55	8	M24x60	8	M20x55	8	M20x55	8
150	M20x55	8	M20x55	8	M20x55	8	M20x55	8	M24x60	8	M24x60	8	M20x55	8	M20x60	8
200	M20x55	8	M20x65	8	M20x55	8	M20x65	8	M24x60	12	M24x70	12	M20x60	8	M20x65	8
250	M20x60	12	M20x70	12	M24x60	12	M24x70	12	M27x65	12	M27x75	12	M22x65	12	M22x70	12
300	M20x65	12	M20x70	12	M24x70	12	M24x75	12	M27x75	16	M27x80	16	M22x70	12	M22x80	12
350	M20x70	12	M20x80	12	M24x70	16	M24x90	16	M30x80	16	M30x100	16	M24x80	12	M24x90	12
400	M24x75	16	M24x90	16	M27x80	16	M27x90	16	M33x90	16	M33x100	16	M27x80	16	M27x100	16
500	M24x90	16	M24x90	16	M30x100	16	M30x100	16	M33x110	16	M33x110	16	M27x110	16	M27x110	16
	* bolts M24x60	4	* bolts M24x70	4	* bolts M30x70	4	* bolts M30x80	4	* bolts M33x80	4	* bolts M33x90	4	* bolts M27x80	4	* bolts M27x90	4

* Valves DN500 (both LUG and WAFER execution) have 4 threaded blind holes each side, therefore screws marked with * are to be used.

Installation

Valve/pipe assembly

1. Leave a space between flanges to allow easy installation of the valve (see fig. 1). Insert two gaskets between flange and valve (not supplied).
2. HD butterfly valves are bi-directional and can be installed with the flow in both directions. There is however a preferential direction (see fig.2), which minimize turbulences when fluid is under pressure.
3. HD Butterfly valves can be installed with the shaft axis in any direction. It is however preferable to keep it vertical .
4. Center valve body between flanges, then tighthen the bolts.
   ATTENTION: Non correct centering of the valve may damage valve disc.
5. After start-up make sure that there are no leakings and that the valve is properly operating

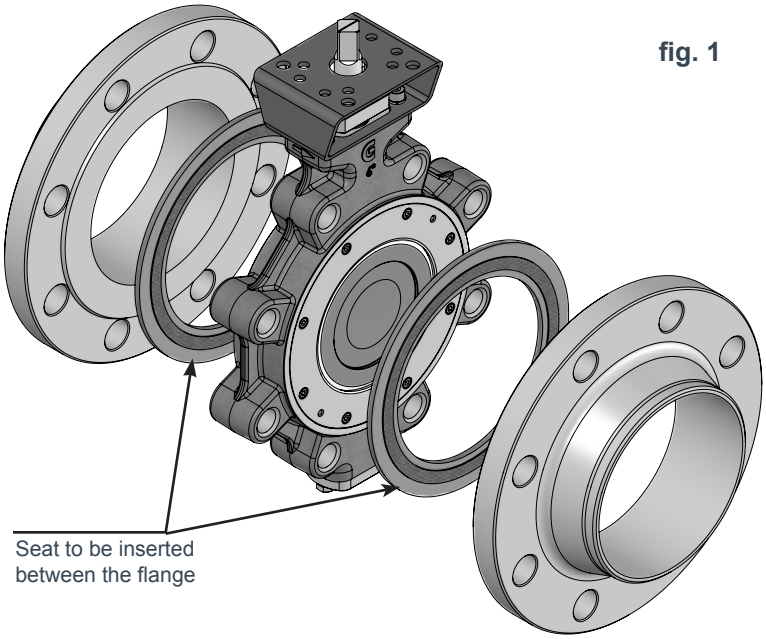

fig. 1

Remarks:

- Always remove the valve before any flange welding to avoid possible damages due to heat
- On top of upper shaft there is a notch parallel to disc indicating its position. (for valves DN>200 refer to the key).
- When actuator or gear box are assembled on the valve, please consider that there is a mechanical stop allowing only anti-clockwise rotation.
- Valve is closed when disc is against the stop.

fig. 2

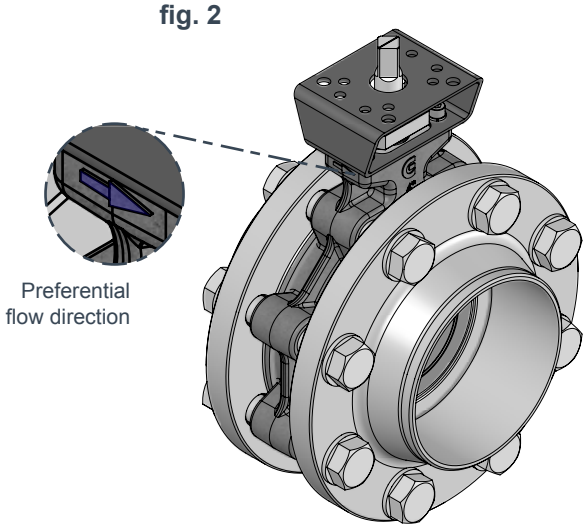

Valve/pipe disassembly

1. Make sure that there is no fluid under pressure upstream or downstream the valve. Disconnect any electronic as well as pneumatic device.
2. Make sure that valve disc is closed.
3. Loose bolts and widen piping flanges. While keeping the valve, remove bolts and disassemble the valve.

Handlever

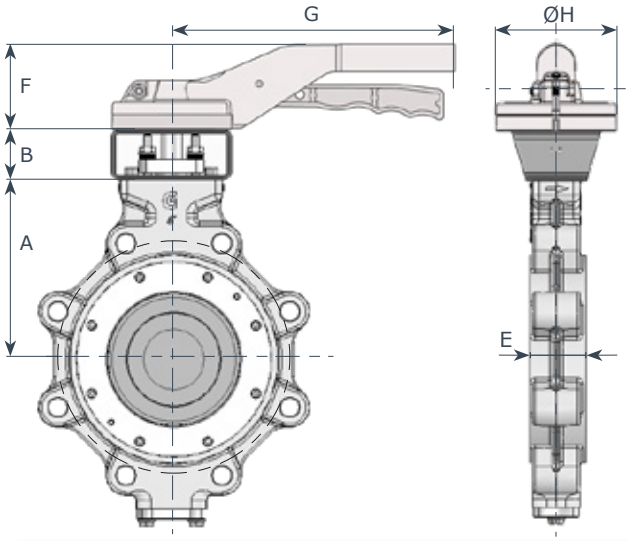

DN	"	A	B	E	F	G	ØH	aluminium Kg wafer	aluminium Kg lug	St.Steel Kg wafer	St.Steel Kg lug
50	2	117	50	43	67	220	93	4.1	6.3	5.2	7.4
65	2 1/2	120	50	46	67	220	93	4.6	7.6	5.7	8.7
80	3	129	50	46	67	220	93	5.4	8.2	6.5	9.3
100	4	160	50	52	67	275	93	8.7	10.4	10.0	11.7
125	5	170	50	56	76	340	125	11.1	15.8	-	-
150	6	179	50	56	76	340	125	14.5	18.6	-	-

COMPONENTS

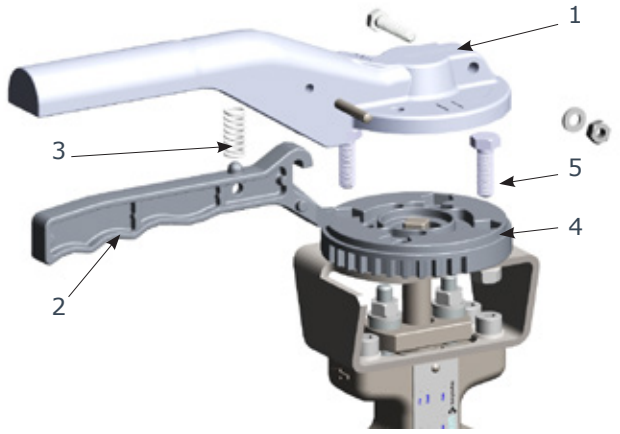

		DN 50-150	DN 50-100
1	lever	aluminium	A351 CF8M
2	trigger	aluminium	A351 CF8M
3	spring	stainless steel	stainless steel
4	disc positioning	aluminium	A351 CF8M
5	screws	stainless steel	stainless steel

Gearboxes - coupling and dimensions

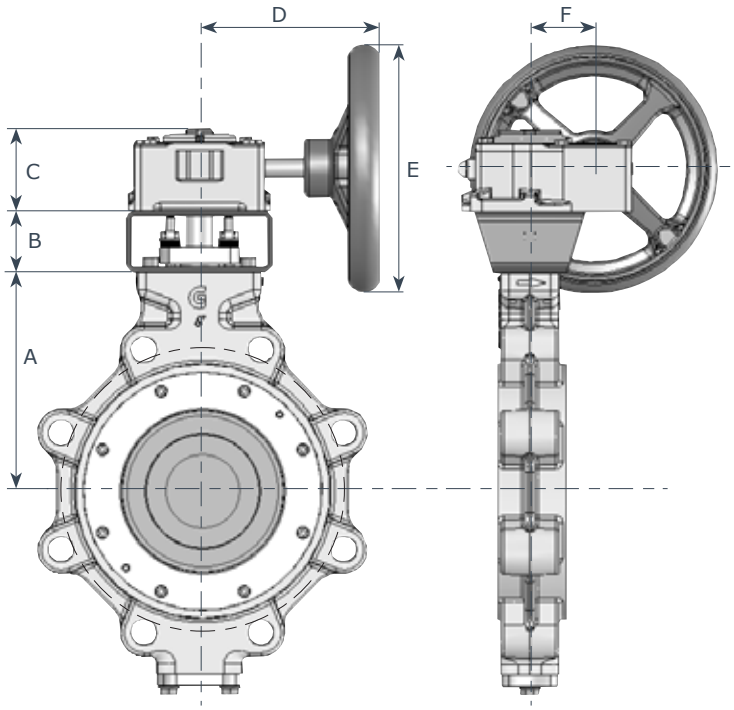

AB series

body:	ductile iron GGG40	
worm gears:	steel	
sector gear:	ductile iron	*low/high*
shaft:	steel	*temperature*
handwheel:	steel	*execution on*
protection:	IP67	*request*
T: -20 / +120 °C		

RTFE seated valve / fluid: H2O / T: 20°C

DN	"	A	B	C	D	E	F	type	kg wafer	kg lug
50	2	117	50	55	157.5	200	43	AB150	5.7	7.9
65	2 1/2	120	50	55	157.5	200	43	AB150	6.2	9.2
80	3	129	50	55	157.5	200	43	AB150	7.0	9.8
100	4	160	50	55	157.5	200	43	AB150	10.2	11.9
125	5	170	50	63	217	200	52	AB215	13.6	18.3
150	6	179	50	63	217	200	52	AB215	17	21.1
200	8	218	60	63	217	200	52	AB215	26.2	34.7
250	10	257	80	88	282	300	71	AB550	43.5	54.5
300	12	300	80	88	282	300	71	AB550	58.5	70.5
350	14	328	100	102	322	500	105	AB1250	105	132
400	16	387	100	102	322	500	105	AB1250	129	162
500	20	451	100	126	425	600	130	AB1950	232	282

INCONEL seated valve / fluid: H2O / T: 20°C

DN	"	A	B	C	D	E	F	type	kg wafer	kg lug
50	2	117	50	55	157.5	200	43	AB150	5.7	7.9
65	2 1/2	120	50	55	157.5	200	43	AB150	6.2	9.2
80	3	129	50	55	157.5	200	43	AB150	7.0	9.8
100	4	160	50	55	157.5	200	43	AB150	10.2	11.9
125	5	170	50	63	217	200	52	AB215	13.6	18.3
150	6	179	50	63	217	200	52	AB215	17.0	21.1
200	8	218	60	88	282	300	71	AB550	36.2	44.7
250	10	257	80	93	282	400	86	AB880	49	60
300	12	300	80	93	282	400	86	AB880	64	76
350	14	328	100	102	322	500	105	AB1250	105	132
400	16	387	100	126	425	600	143	AB1950	139	172
500	20	451	100	126	398	600	143	AB1950 PR4	245	295

Pneumatic actuator

Rack & Pinion Actuators - MT/MTS Series

Max air pressure: 10 bar
Temperature: -20°C / +80°C
Torque range: 31/3564 Nm

Double travel stop
open/close: ±10°

Scotch Yoke Actuators - CHD Series

Max air pressure: 6 bar
Temperature: -20 / +80°C
Torque Range: 1200/305000 Nmt

Double travel stop
open/close: ±6°

Fluid: H2O - T: 20° C - Air pressure: 5,5 Bar - Seat: RTFE

DN	M	PN 10				PN 16				PN 20 / PN 25			
		DA		SR		DA		SR		DA		SR	
		mod.	G	mod.	G	mod.	G	mod.	G	mod.	G	mod.	G
50	117	MT 15	65	MTS 25	65	MT 20	65	MTS 30	65	MT 25	65	MTS 35	65
65	120	MT 20	65	MTS 30	65	MT 20	65	MTS 30	65	MT 25	65	MTS 35	65
80	129	MT 20	65	MTS 30	65	MT 25	65	MTS 35	65	MT 30	65	MTS 40	65
100	160	MT 20	65	MTS 35	65	MT 25	65	MTS 40	65	MT 35	65	MTS 45	65
125	170	MT 30	65	MTS 45	65	MT 35	65	MTS 45	65	MT 35	65	MTS 50	65
150	179	MT 35	65	MTS 50	65	MT 40	65	MTS 50	65	MT 45	65	MTS 55	65
200	218	MT 40	110	MTS 50	110	MT 45	110	MTS 60	110	MT 50	110	MTS 65	100
250	257	MT 50	200	MTS 60	200	MT 55	200	MTS 65	200	MT 60	200	MTS 70	200
300	300	MT 60	200	MTS 70	200	MT 60	200	MTS 70	200	MT 70	200	MTS 75	200
350	328	MT 60	200	MTS 70	200	MT 65	200	MTS 75	200	MT 70	200	CHD16-030B01	200
400	387	MT 65	200	MTS 70	200	MT 70	200	CHD16-030B01	200	MT 75	200	CHD25-035B01	200
500	451	MT 70	200	CHD16-035B01	0	MT 75	200	CHD25-038B01	200	CHD16-030	0	CHD25-043B01	200

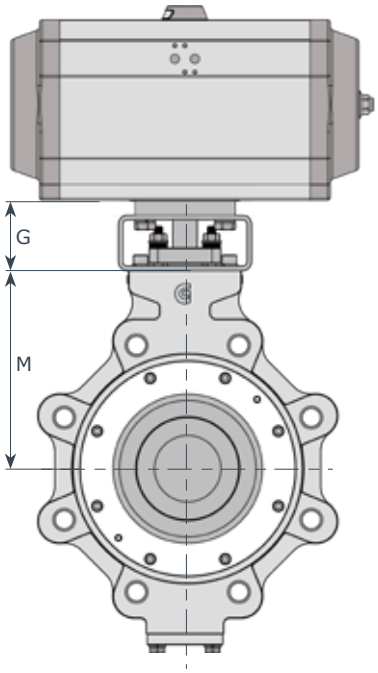

Fluid: H2O - T: 20° C - Air pressure: 5,5 Bar - Seat: INCONEL

DN	M	PN 10				PN 16				PN 20 / PN 25			
		DA		SR		DA		SR		DA		SR	
		mod.	G	mod.	G	mod.	G	mod.	G	mod.	G	mod.	G
50	117	MT 20	65	MTS 30	65	MT 20	65	MTS 35	65	MT 25	65	MTS 35	65
65	120	MT 25	65	MTS 35	65	MT 25	65	MTS 35	65	MT 30	65	MTS 40	65
80	129	MT 25	65	MTS 35	65	MT 25	65	MTS 35	65	MT 35	65	MTS 45	65
100	160	MT 25	65	MTS 35	65	MT 30	65	MTS 40	65	MT 35	65	MTS 45	65
125	170	MT 35	65	MTS 45	65	MT 35	65	MTS 50	65	MT 40	65	MTS 50	65
150	179	MT 45	65	MTS 50	65	MT 45	65	MTS 55	65	MT 50	65	MTS 60	65
200	218	MT 45	110	MTS 60	110	MT 50	110	MTS 60	100	MT 60	110	MTS 70	200
250	257	MT 55	200	MTS 70	200	MT 60	200	MTS 70	200	MT 65	200	MTS 70	200
300	300	MT 65	200	MTS 70	200	MT 65	200	MTS 70	200	MT 70	200	MTS 75	200
350	328	MT 65	200	MTS 70	200	MT 70	200	MTS 75	200	MT 70	200	CHD16-035B01	200
400	387	MT 70	200	CHD16-035B01	200	MT 75	200	CHD25-035B01	200	CHD16-025	200	CHD25-038B01	200
500	451	MT 75	200	CHD25-038B01	200	CHD16-030	0	CHD25-043B01	200	CHD16-035	0	CHD30-043B01	200

NOTE

G quote can change depending on valve/actuator coupling.

Declutchable manual gearboxes

ILGD Series

body: ductile iron GGG40
worm gears: steel
sector gear: ductile iron

shaft: steel
handwheel: steel
T: -20/+120°C

protection: IP65
IP67 on req.

Ø valve	double action actuator		spring return actuator	
	actuator type	gearbox type	actuator type	gearbox type
50-100	MT20-35	ILGD200	MTS25-45	ILGD200
125-150	MT30-40	ILGD200	MTS45-55	ILGD600
	MT45-55	ILGD600	MTS60	ILGD900
200	MT40-55	ILGD600	MTS50	ILGD600
	MT60	ILGD900	MTS60-65	ILGD900
	-	-	MTS70	ILGD1500
250	MT50-55	ILGD600	MTS60-65	ILGD900
	MT60-65	ILGD900	MTS70	ILGD1500
300	MT60-65	ILGD900	MTS70	ILGD1500
	MT70	ILGD1500	MTS75	ILGD2400
350	MT60-70	ILGD1500	MTS70	ILGD2400
	-	-	MTS75	ILGD5000
400	MT60-70	ILGD1500	MTS60-70	ILGD1500
	MT75	ILGD5000	on req.	on req.
500	MT70-75	ILGD5000	on req.	on req.

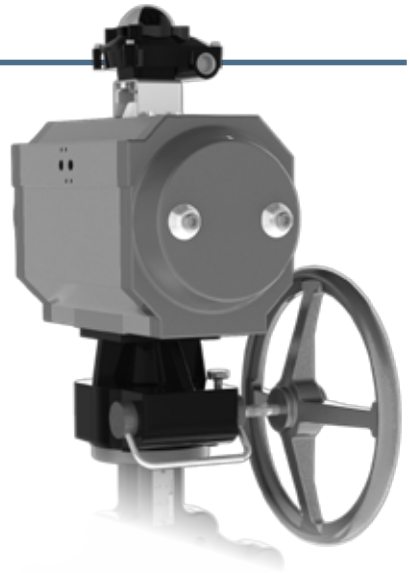

Waterproof valve shaft extension

When necessary, it's possible to extend the valve shaft as indicated in the figure. Construction is in carbon steel with protective paint (on request stainless steel).

NOTE

Our tecnical department is available to solve special applications.

"L" measure should be indicated when ordering.

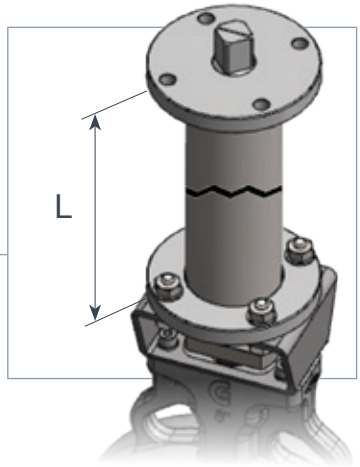

Hydraulic actuator

- Tecnical features:
  - » ductile iron cast body
  - » steel rack and pinion
  - » NBR seats
- fluid type:
  - » hydraulic oil type : HPL DIN51524-2 / ISO 6743-4. Viscosity 15/200 cst
- working pressure: 10 - 120 bar
- working temperature: -20°C / +80°C

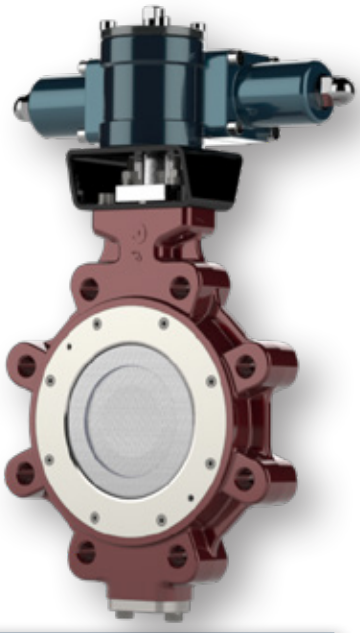

Fluid: H2O - T: 20° C - Seat: RTFE

DN	Oil pressure: 60Bar						Oil pressure: 120Bar					
	PN 10		PN 16		PN 20 / PN 25		PN 10		PN 16		PN 20 / PN 25	
	DA	SR	DA	SR	DA	SR	DA	SR	DA	SR	DA	SR
50	H28DA	H40SRA	H28DA	H40SRA	H28DA	H40SRA	H28DA	H40SRB	H28DA	H40SRB	H28DA	H40SRB
65	H28DA	H40SRA	H28DA	H40SRA	H28DA	H40SRA	H28DA	H40SRB	H28DA	H40SRB	H28DA	H40SRB
80	H28DA	H40SRA	H28DA	H40SRA	H28DA	H40SRA	H28DA	H40SRB	H28DA	H40SRB	H28DA	H40SRB
100	H28DA	H40SRA	H28DA	H40SRA	H28DA	H50SRA	H28DA	H40SRB	H28DA	H40SRB	H28DA	H40SRB
125	H28DA	H50SRA	H40DA	H50SRA	H40DA	H50SRA	H28DA	H40SRB	H28DA	H40SRB	H28DA	H40SRB
150	H40DA	H50SRA	H40DA	H63SRA	H50DA	H63SRA	H28DA	H40SRB	H28DA	H50SRB	H40DA	H50SRB
200	H50DA	H63SRA	H50DA	H63SRA	H63DA	H80SRA	H40DA	H50SRB	H40DA	H50SRB	H50DA	H63SRB
250	H50DA	H80SRA	H63DA	H80SRA	H63DA	-	H50DA	H63SRB	H50DA	H63SRB	H50DA	H80SRB
300	H63DA	-	H63DA	-	H80DA	-	H50DA	H80SRB	H50DA	H80SRB	H63DA	H80SRB
350	H80DA	-	H80DA	-	-	-	H63DA	H80SRB	H63DA	-	H80DA	-
400	H80DA	-	-	-	-	-	H80DA	H80SRB	H80DA	-	H80DA	-
500	-	-	-	-	-	-	H80DA	-	H80DA	-	-	-

Fluid: H2O - T: 20° C - Seat: INCONEL

DN	Oil pressure: 60Bar						Oil pressure: 120Bar					
	PN 10		PN 16		PN 20 / PN 25		PN 10		PN 16		PN 20 / PN 25	
	DA	SR	DA	SR	DA	SR	DA	SR	DA	SR	DA	SR
50	H28DA	H40SRA	H28DA	H40SRA	H28DA	H40SRA	H28DA	H40SRB	H28DA	H40SRB	H28DA	H40SRB
65	H28DA	H40SRA	H28DA	H40SRA	H28DA	H50SRA	H28DA	H40SRB	H28DA	H40SRB	H28DA	H40SRB
80	H28DA	H40SRA	H28DA	H40SRA	H40DA	H50SRA	H28DA	H40SRB	H28DA	H40SRB	H28DA	H40SRB
100	H28DA	H40SRA	H28DA	H50SRA	H40DA	H50SRA	H28DA	H40SRB	H28DA	H40SRB	H28DA	H40SRB
125	H40DA	H50SRA	H40DA	H63SRA	H40DA	H63SRA	H28DA	H40SRB	H28DA	H50SRB	H28DA	H50SRB
150	H50DA	H63SRA	H50DA	H63SRA	H50DA	H80SRA	H40DA	H50SRB	H40DA	H50SRB	H40DA	H63SRB
200	H50DA	H80SRA	H50DA	H80SRA	H63DA	-	H40DA	H50SRB	H50DA	H63SRB	H50DA	H80SRB
250	H63DA	-	H63DA	-	H80DA	-	H50DA	H63SRB	H50DA	H80SRB	H63DA	H80SRB
300	H80DA	-	H80DA	-	-	-	H63DA	H80SRB	H63DA	-	H63DA	-
350	H80DA	-	-	-	-	-	H63DA	-	H63DA	-	H80DA	-
400	-	-	-	-	-	-	H80DA	-	H80DA	-	-	-
500	-	-	-	-	-	-	-	-	-	-	-	-

FLUIDTECHNIK BOHEMIA, s.r.o.
Olomoucká 87, CZ-627 00 Brno,
tel.: +420 548 213 233-5 • fax: +420 548 213 238
e-mail: brno@fluidbohemia.cz • www.fluidbohemia.cz
NON STOP linka technické podpory: +420 548 426 832